400MHz Half-wave Spoke Resonator Crab Cavity For LHC Upgrade

Zenghai Li

SLAC National Accelerator Laboratory

LARP CM13, Nov. 4, 2009, Port Jefferson, NY

Work supported by U.S. DOE under contract DE-AC02-76SF00515

SLAC NATIONAL ACCELERATOR LABORATORY

LARP

Outline

- SLAC Crab cavity studies prior to LHC-CC09
- LHC-CC09 new design considerations
- A new compact 400-MHz half-wave spoke resonator (HWSR) crab cavity
  - The shape
  - LOM, HOM-v damping
  - HOM-h and input couplers
- Summary

SLAC Crab Cavity Studies Prior to LHC-CC09

800 MHz Elliptical

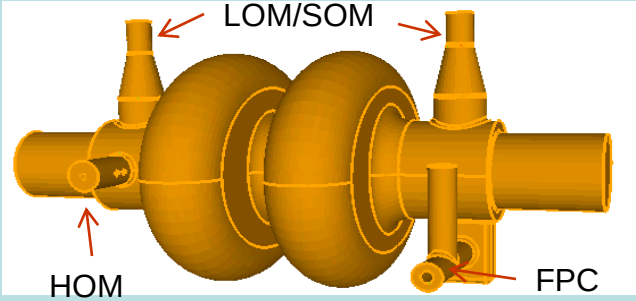

(LARP-CM11 baseline)

Design complete

- Cavity shape optimized
- FP, LOM, SOM, HOM couplers designed
- Multipacting analyzed
- Sensitivity and tolerances studied
- Dimension fit global scheme

800 MHz Spoke

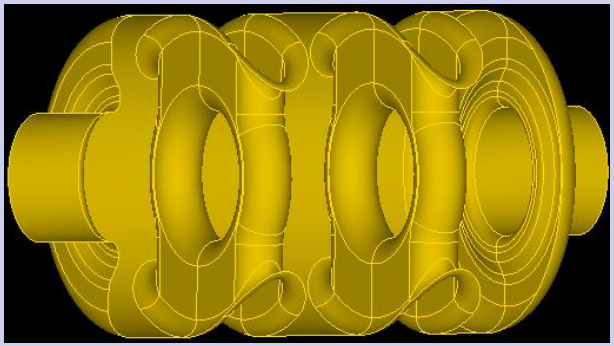

- Cavity shape preliminary study performed
- Cavity radius: ~150 mm
- Design could fit both global and local schemes

400MHz-Coaxial

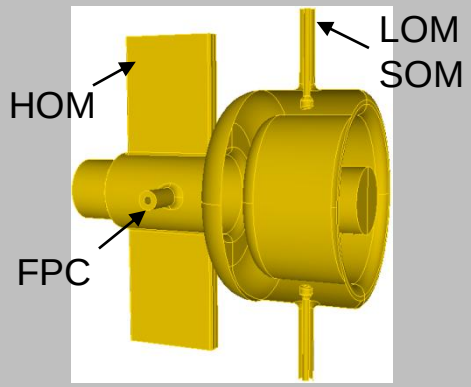

- Cavity shape optimized
- FP, LOM, SOM, HOM couplers designed
- Multipacting analyzed
- Design could fit the global scheme, not the local scheme

LHC-CC09 Design Considerations

- Frequency: 400 MHz
- Design for both local and global crabbing schemes
- Space constraints determined by local scheme
  - Horizontal dimension (radius) ~ 140 mm

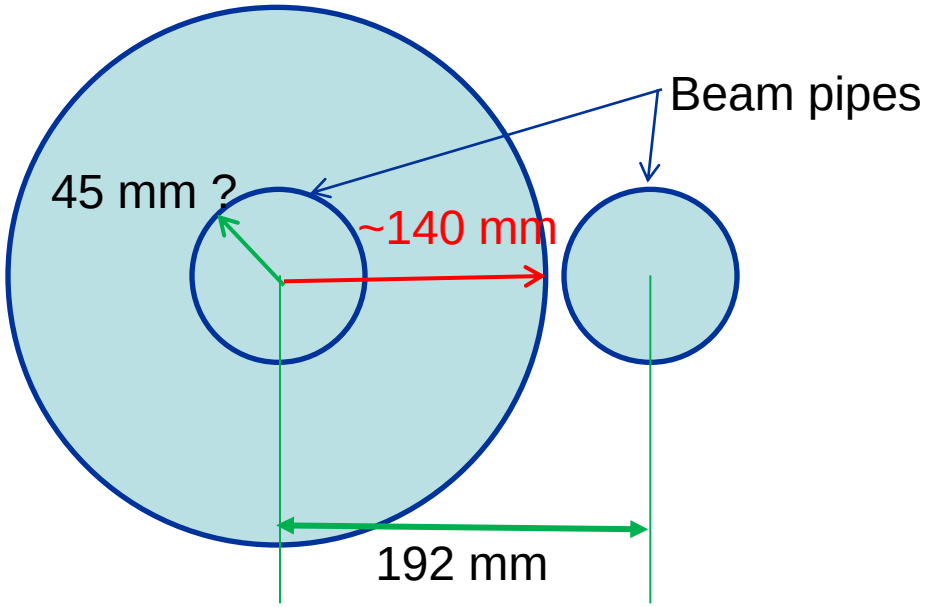

Original: 400MHz Compact HWR Design

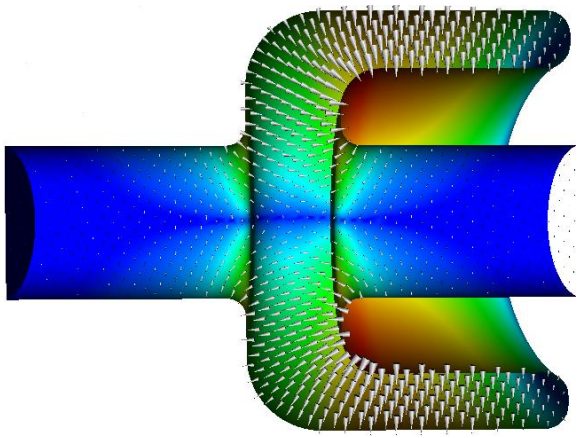

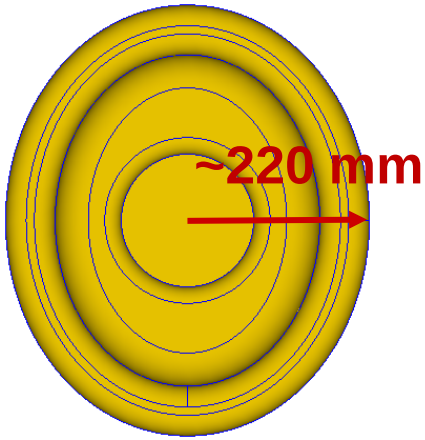

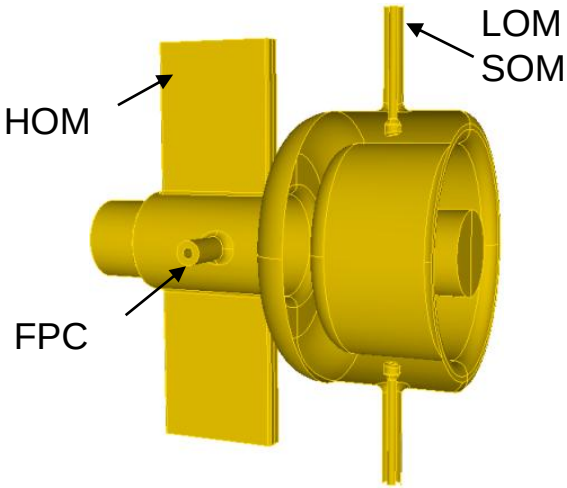

- Coaxial half-wave resonator
- Elliptical cross section to split X-Y degeneracy
- Probe coupler to damp LOM and SOM modes
- Waveguide coupler on beam pipe to damp HOM modes
- Beam Pipe radius ~ 80mm
- Cavity horizontal dimension ~ 220 mm TOO LARGE for local scheme

…… to Reduce Horizontal Dimension

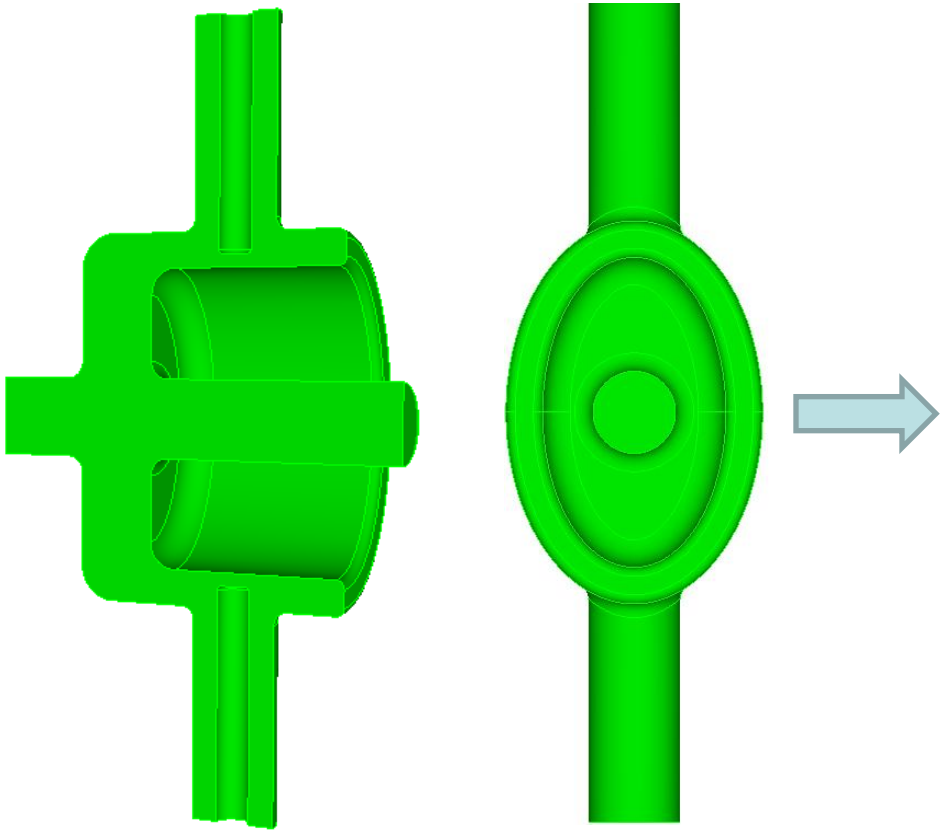

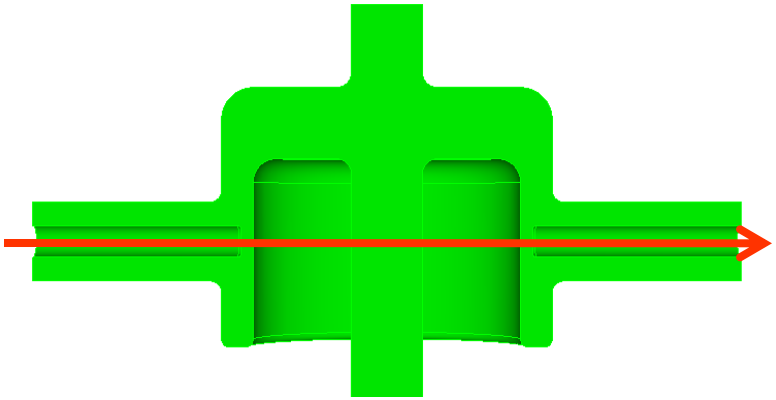

To reduce horizontal size
Squeeze cavity shape loses efficiency

"Rotate" 90 degrees

- Using 2 gaps for deflection
- Close top gap
  - ➢ new compact half-wave spoke resonator

The New Compact 400 MHz Cavity Design

Half-Wave Spoke Resonator (HWSR) crab cavity

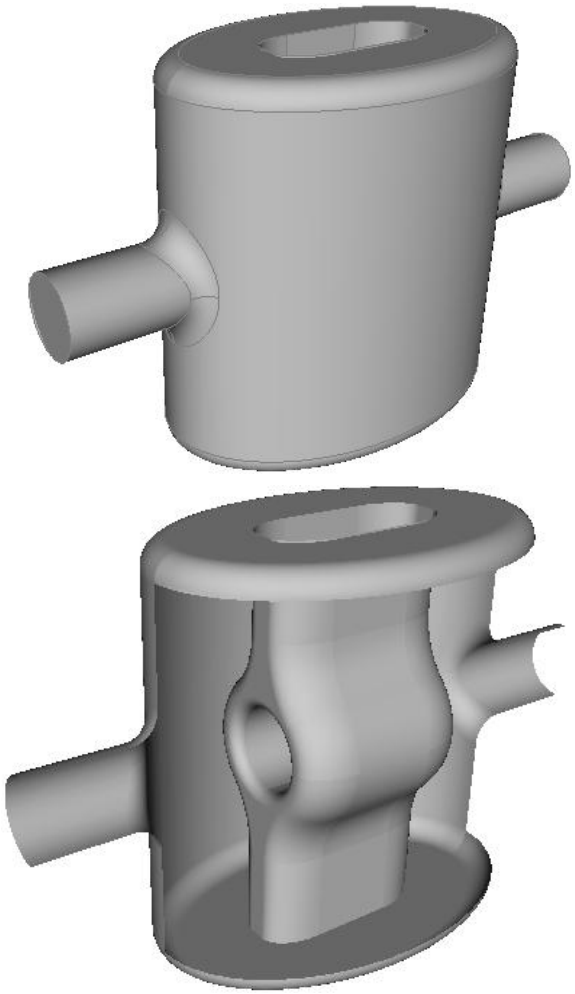

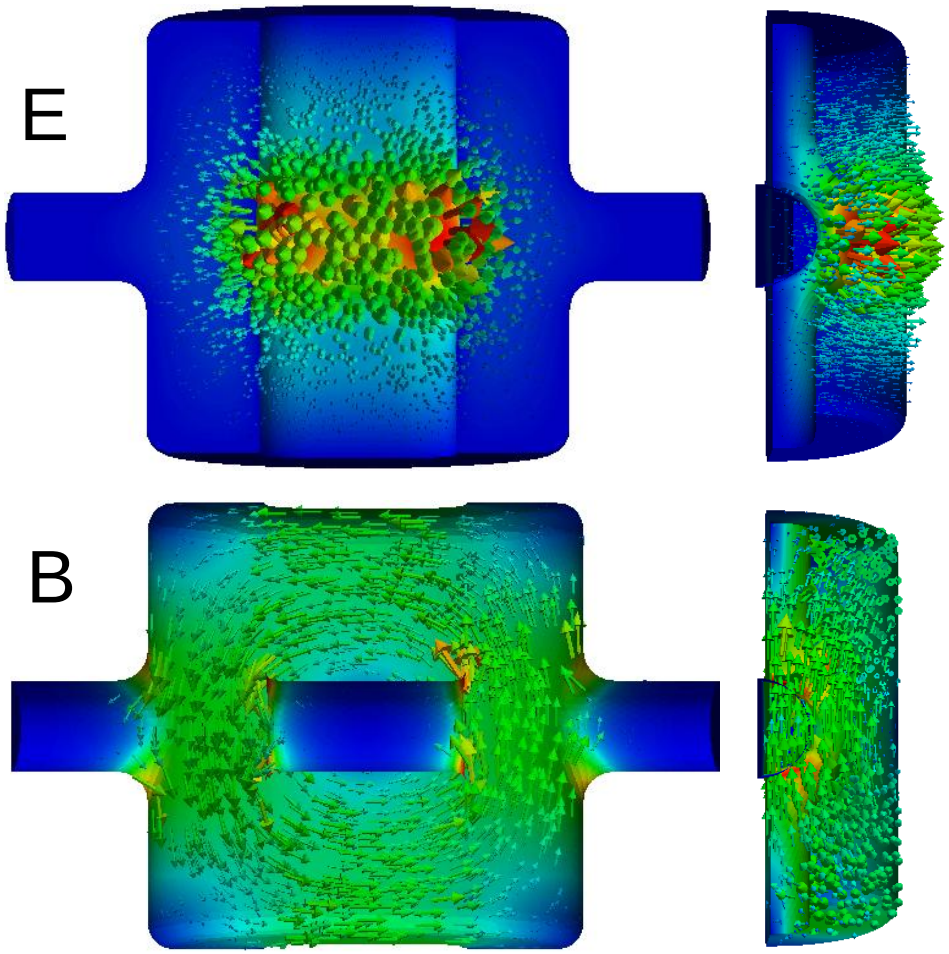

400 MHz HWSR Cavity Parameters

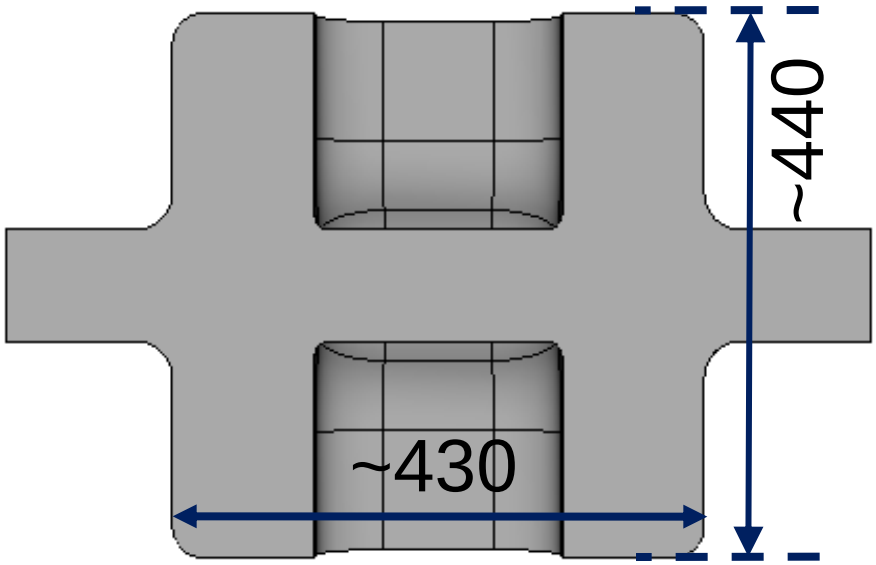

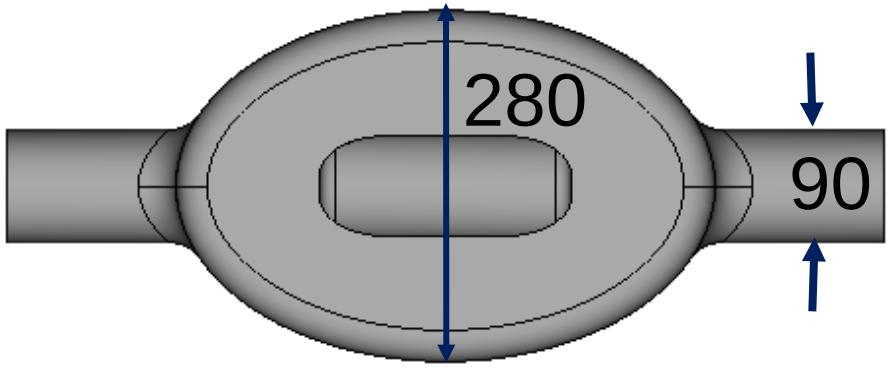

elliptical or racetrack

Preliminary Parameters	
Cavity Width (mm)	**280**
Cavity Height (mm)	440
Cavity Length (mm)	430
Beam pipe radius (mm)	**45**
$(R/Q)_T$ (ohm/cavity)	275
E_S/V_T ((MV/m)/MV)	13
B_S/V_T (mT/MV)	27

- 8 MV deflecting voltage required
- 2 cavities/beam, 4 MV each

Dipole Modes

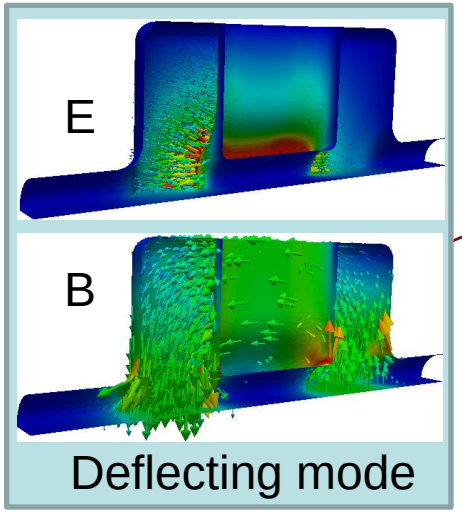

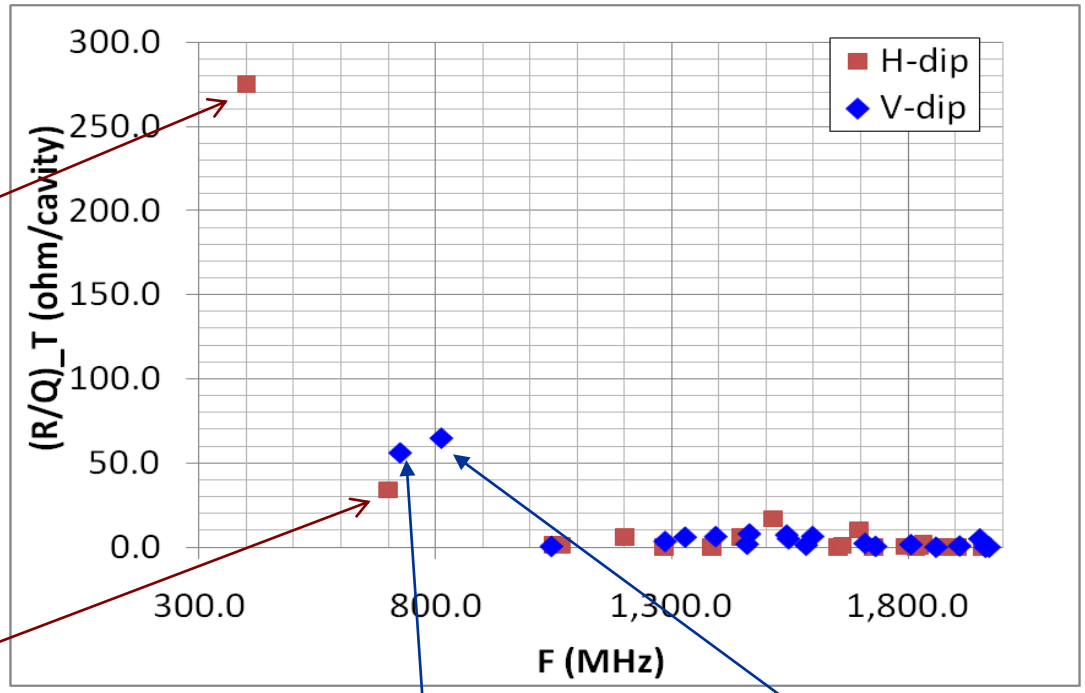

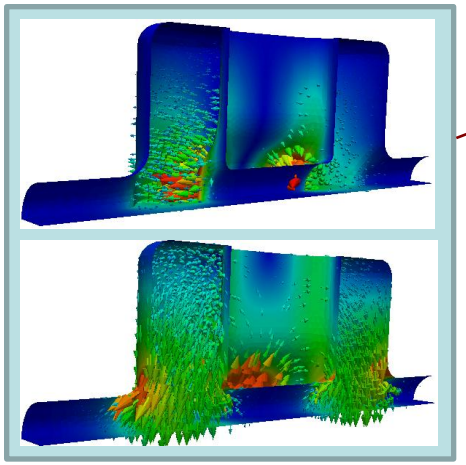

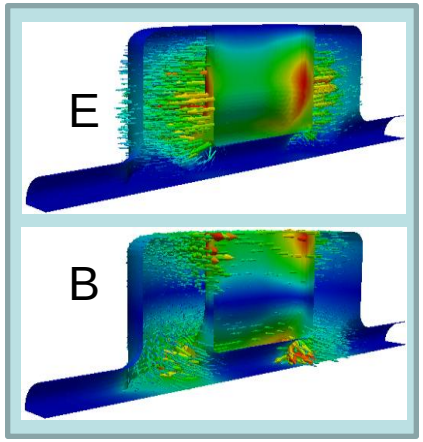

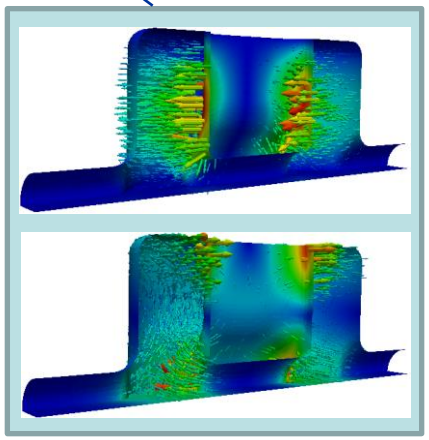

No SOM mode

Monopole Modes

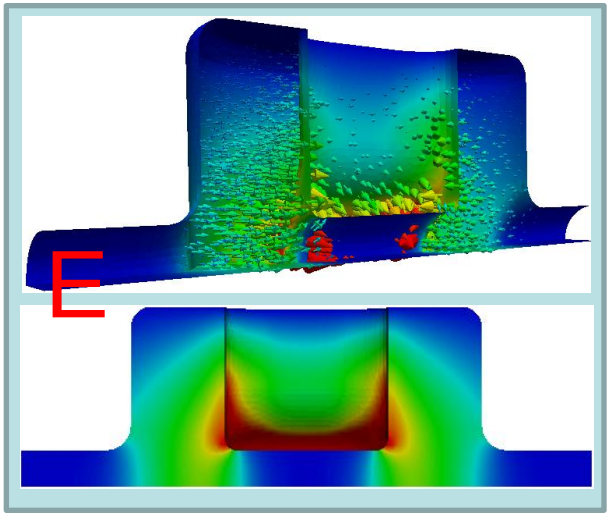

LOM

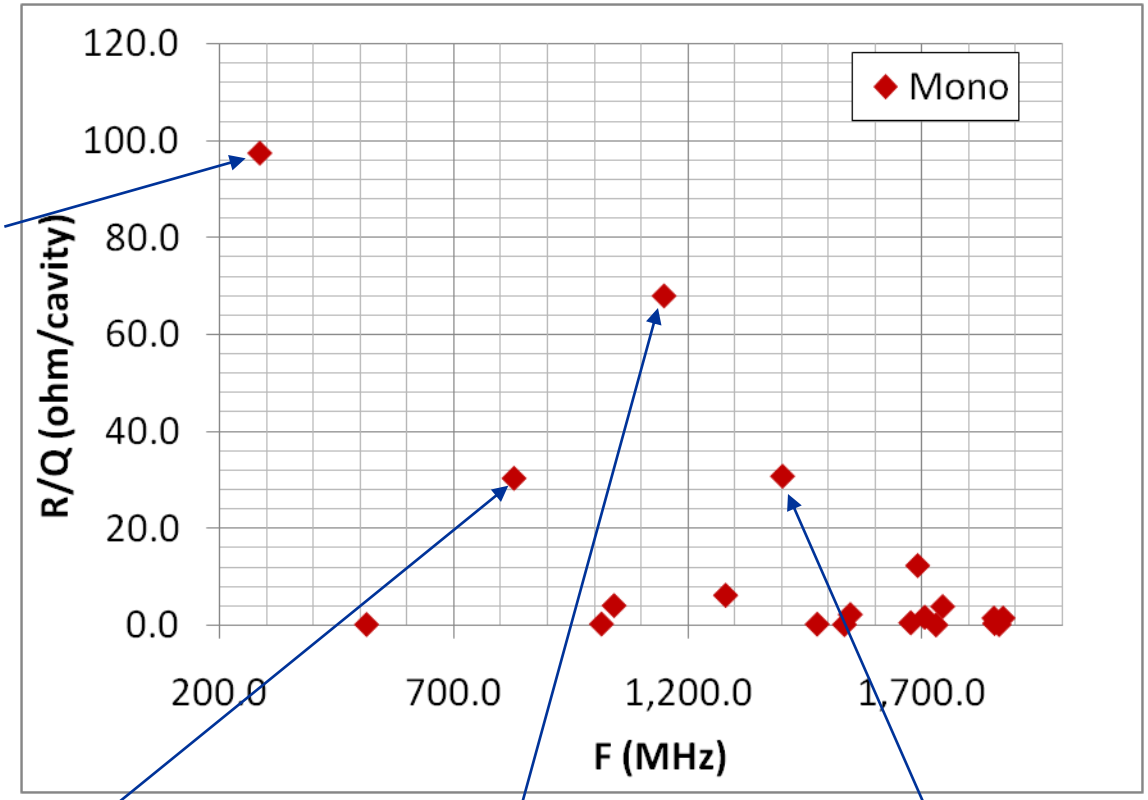

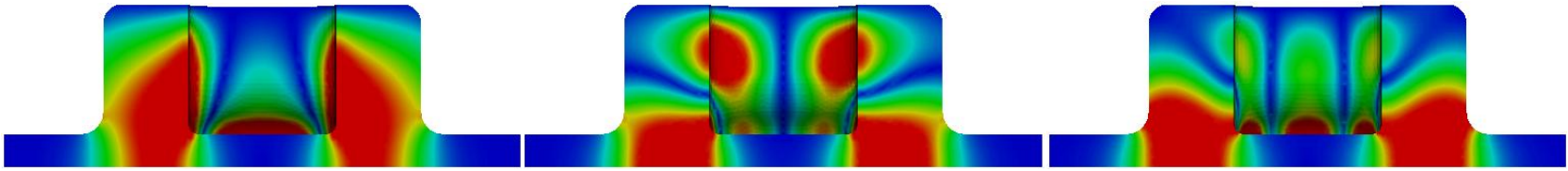

Transverse Impedance Budget

E. Shaposhnikova
LHC-CC09

Summary: transverse impedance budget

- Threshold for the nominal intensity and one cavity at 450 GeV determined by the damping time of 60 ms is 2.5 MOhm/m
- With margin for particle distribution:
  - $0.6/(1-f_r)$ MOhm/m f_r [GHz] < 0.8
  - $1.2(1+2f_r)$ MOhm/m f_r [GHz] > 0.8
  - 3 MOhm/m at 800 MHz → 0.4 MOhm/m for upgrade intensity and 2 cavities
- Additional factor proportional to local beta-function $\beta/\langle\beta\rangle$

Longitudinal Impedance Budget

E. Shaposhnikova
LHC-CC09

Summary: longitudinal impedance budget

- Requirement for HOM damping in LHC given so far is 60 kOhm (defined by 200 MHz RF at 450 GeV)
- For nominal intensity
  - in 400 MHz RF system we have 80 kOhm for small emittance beam (1 eVs) at 7 TeV, 300 kOhm for 2.5 eVs
  - in 200 MHz RF system it is 70 kOhm , but the 400 MHz RF system can be used as Landau system
- Assumption: no loss of Landau damping due to broad-band impedance (ImZ/n > 0.1 Ohm, budget estimation in LHC DR - 0.07 Ohm), possible for small emittances (<0.7 eVs) at injection into 200 MHz RF system or at 7 TeV in the 400 MHz RF system (< 1 eVs)

➢ 10 kOhm for upgrade intensity and two identical cavities

Impedance/Qext Requirements

- Impedance requirement (E. Shaposhnikova, LHC-CC09)
  - Longitudinal (R): 80 kohm
  - Transverse (Z_T): 2.5 Mohm/m

(verify with beam people)

Longitudinal shunt impedance

$$\left(\frac{R}{Q}\right) = \frac{|V_z|^2}{\omega U}$$

Transverse shunt impedance

$$\left(\frac{R}{Q}\right)_T = \frac{|V_z(r_0)|^2}{\omega U\left(\frac{\omega}{c} r_0\right)^2}$$

Impedance for beam instability

$$\frac{Z_T}{Q} = \frac{\omega}{c}\left(\frac{R}{Q}\right)_T$$

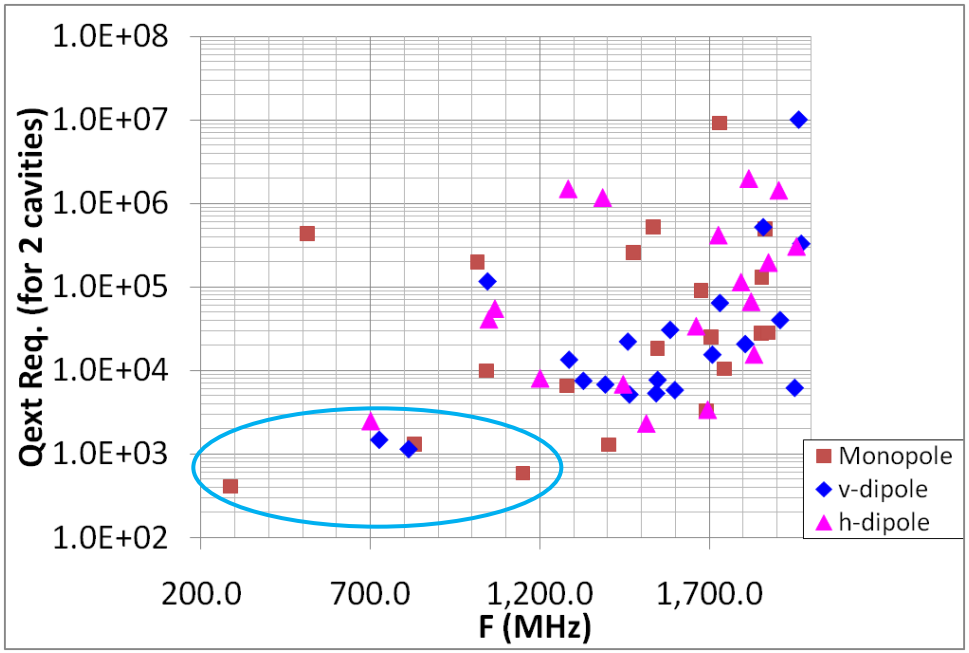

- [Qext for 2-cavity (local scheme will double #cavity)]
- Qext calculation based on 2D (R/Q)

LOM/HOM-v Couplers

- Cavity side coax coupler
  - Inner conductor may need cooling – tip in high B region
  - Important keep symmetry – need more couplers

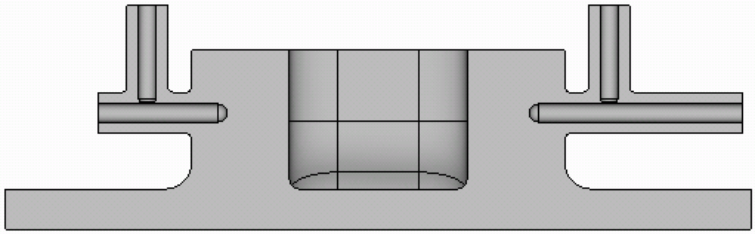

- On beam pipe coax-coax LOM/HOM-v damping considered a good option

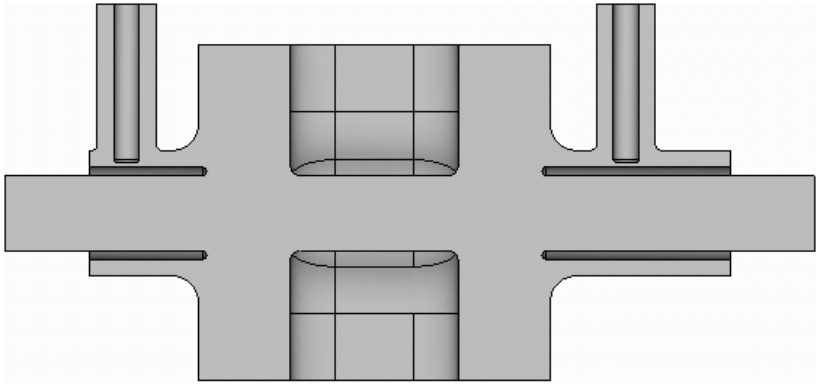

LOM/HOM-v Damping - Preliminary

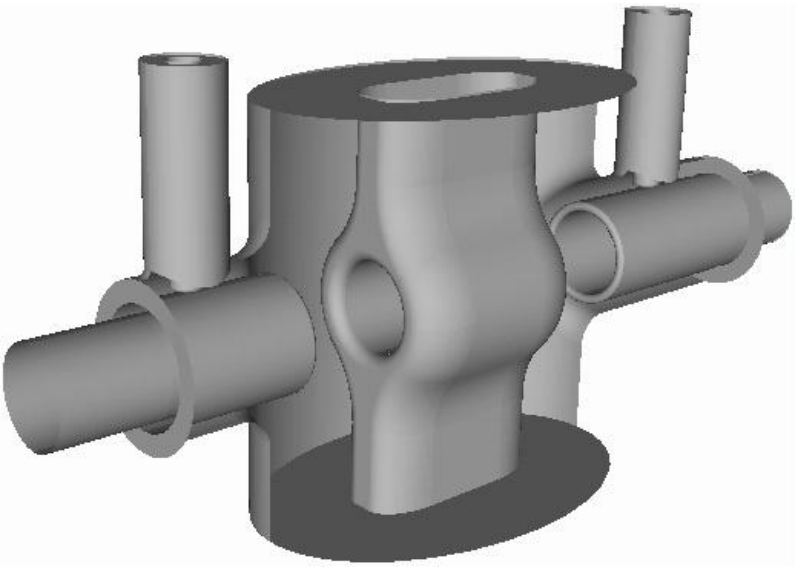

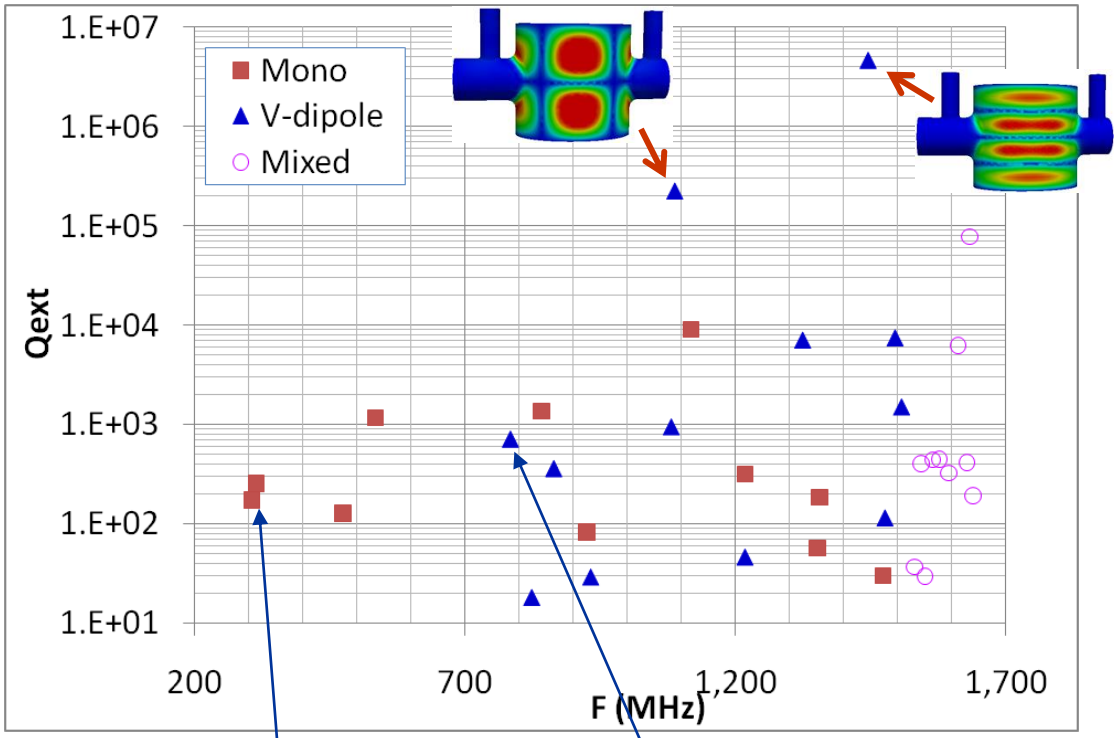

- Extra coax modes (mono)
- Damping effective
- Optimization in progress

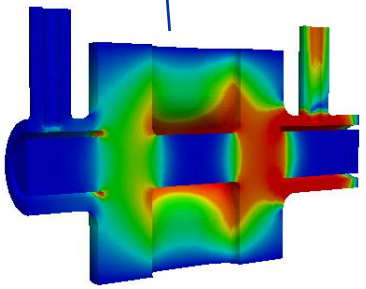

monopole

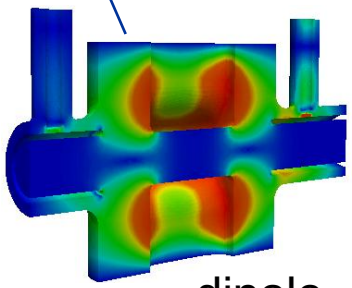

dipole

FPC and HOM Couplers

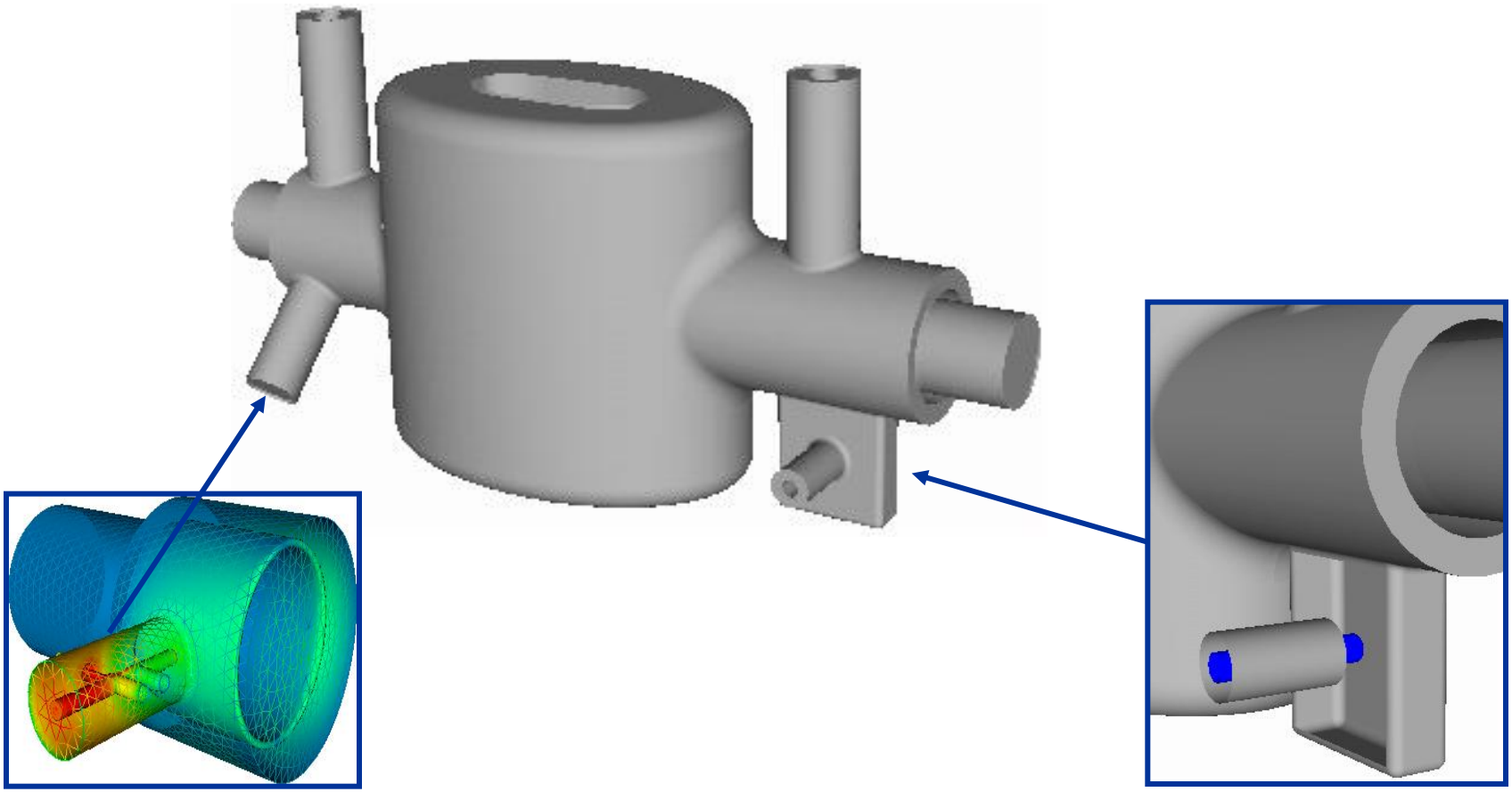

- Use similar HOM-h coupler as the 800-MHz design
- Notch filter to reject deflecting mode
- Input coupler with magnetic coupling
- Eliminates direct coupling from FPC to LOM/HOM-v

Input Power Requirement

$$V_T = 2\left(P_{in}\left(\frac{R_T}{Q}\right)\frac{\beta}{1+\beta}Q_L\right)^{1/2}$$

$$V_{T,b} = I(\omega)\left(\frac{R}{Q}\right)_T Q_L\left(\frac{\omega}{c}r_b\right) \qquad \text{(beam)}$$

$$P_{in,MAX} = \frac{\left(V_T + V_{T,b}\right)^2}{4\left(\frac{R_T}{Q}\right)\frac{\beta}{1+\beta}Q_L}$$

- V_T=4.0 MV/cavity
- (R_T/Q)=275 Ω/cavity
- $Q_L \cong Q_{ext} = 10^6$
- P_{in} (r=0) = 14.6 kW/cavity

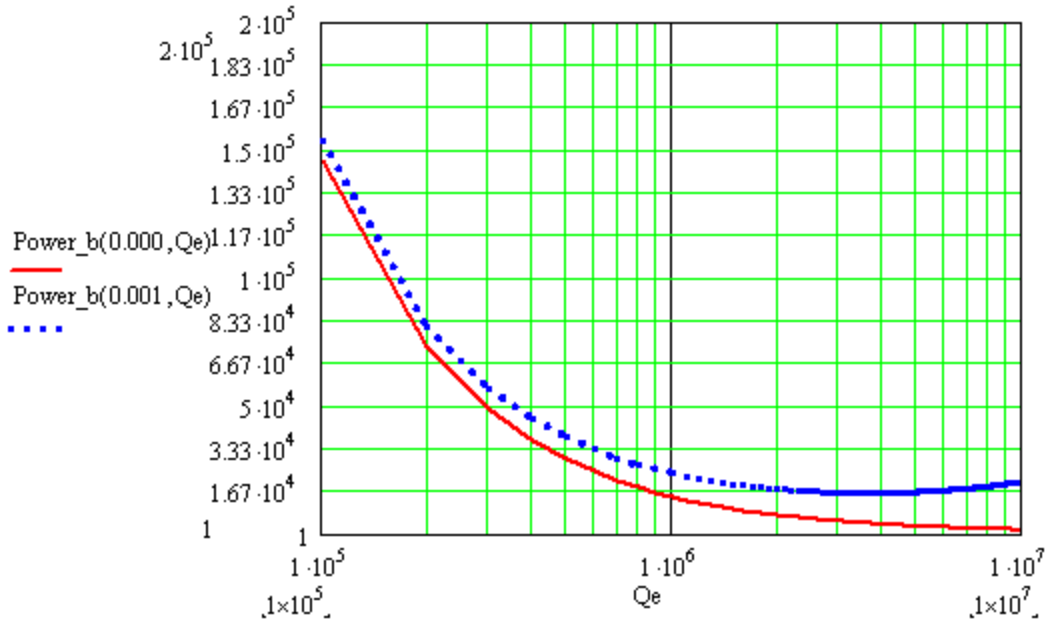

Summary

- After the LHC-CC09 workshop, effort has been focused on a compact cavity that can be used in both local and global schemes.
- A design for a compact 400-MHz half-wave spoke resonator cavity in progress
  - Compact size, fit both local and global schemes
  - Favorable RF parameters
  - Coax-coax LOM/HOM-v coupler effective in damping
  - Further optimizations, MP analyses underway