# Crab cavity installation options

Riccardo de Maria (BNL)
Aknowledment to R. Calaga, O. Bruening (CERN), O. Bruenner, S. Fartoukh, M. Giovannozzi, G. Kotzian, W. Hoefle, R. Tomas, J. Tuckmantel, F. Zimmermann.

November 4, 2009

# Synopsis

- Steve Myers: Oct 1 2009 “Following the success of KEKB, CERN must pursue the use of crab cavities for the LHC, since the potential luminosity increase is significant.”

The road map may or may not involve a staged approach with prototype tests or be design installed under in a unique effort.

I’ll give an overview of all possible location for installations.

# Working hypothesis

- The two beams should be in separated vacuum chambers. It is possible to think the opposite but experience suggests to not to.

- The kick should be uniform over the bunch length (not too short because of e-cloud). It means that cavity resonant frequency ideally should be 400MHz, but 800MHz is acceptable and combination of higher frequency might not be excluded.

Both hypothesis imply that the separation of the beam should be larger of the half width of the cavity. Prototypes shows that 420mm is possible, 198mm is an hard limit to surpass.

# Location

Ideally the location should:

- be free from other equipment (present and planned)
- allow easy access to cryogenic lines
- allow easy installation of RF power line
- allow easy installation in the neighborhood of RF power converter
- not be affected by high level of radiation
- allow quick installation of crab cavity
- do not require hardware changes
- have large separation between beams
- have large beta function in the plane of the kick

There is no such a place in the 28.7km of the LHC, so we will examine what are the locations close enough to the requirements confident that some of them could be relaxed in the future.

# LHC layout

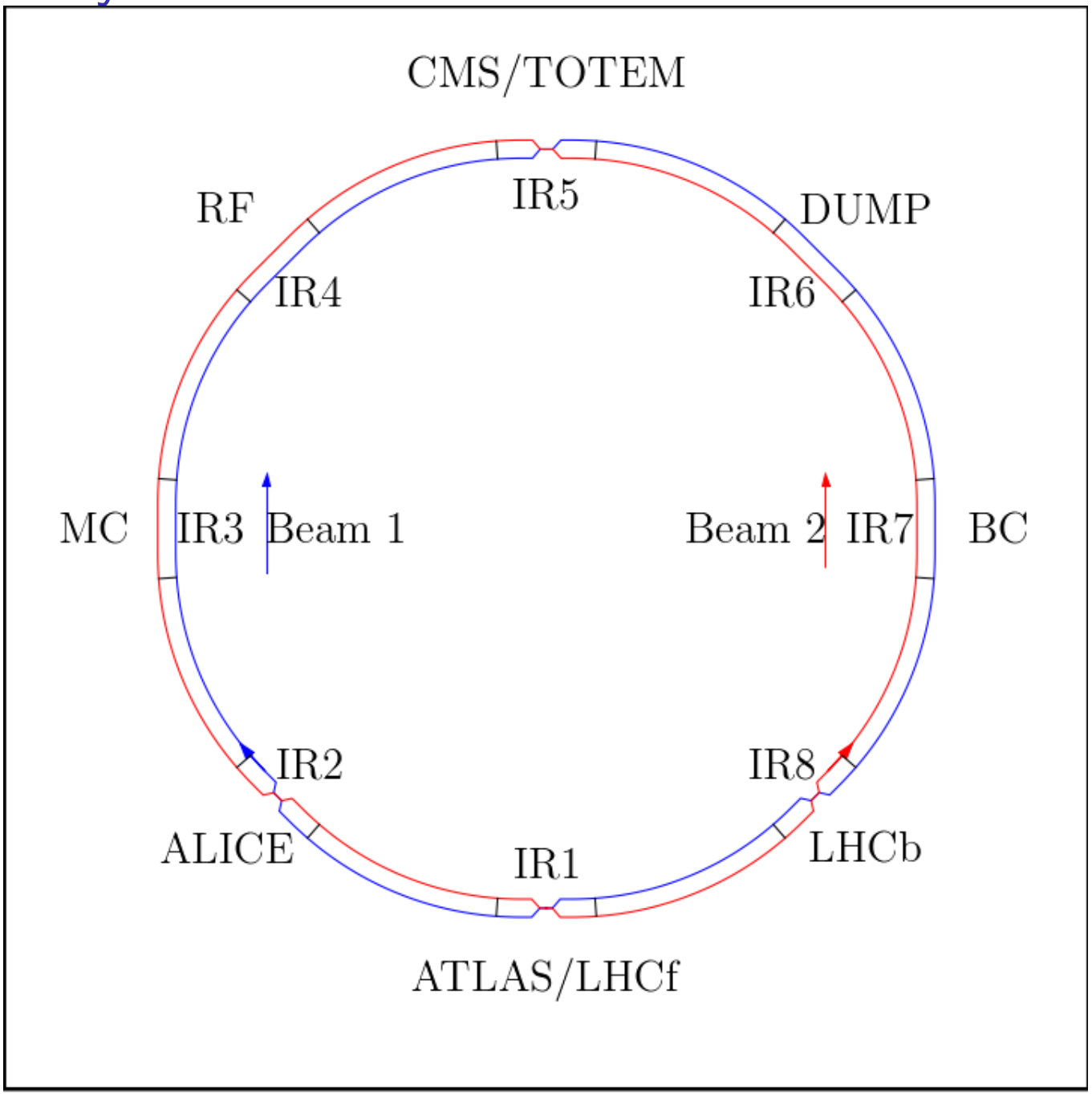
CMS/TOTEM
IR5
RF
DUMP
IR4
IR6
MC
IR3
Beam 1
Beam 2
IR7
BC
IR2
IR8
ALICE
IR1
LHCb
ATLAS/LHCf

# Possible locations

IR4 (global scheme):

- in the reserved space of capture cavities
- in the reserved space of additional damper kicker
- in the dogleg (D3-D4)
- close to D3 after displacing the dogleg further from the IP
- close to D3 after reducing the dogleg length with new dipoles

IR1 or IR5 between D1 and D2:

- compatible with local scheme
- with or without additional dipoles to increase beam separation

IR2 or IR8 between D1 and D2:

- global scheme

SPS:

- for testing purposes

# IR4 Layout

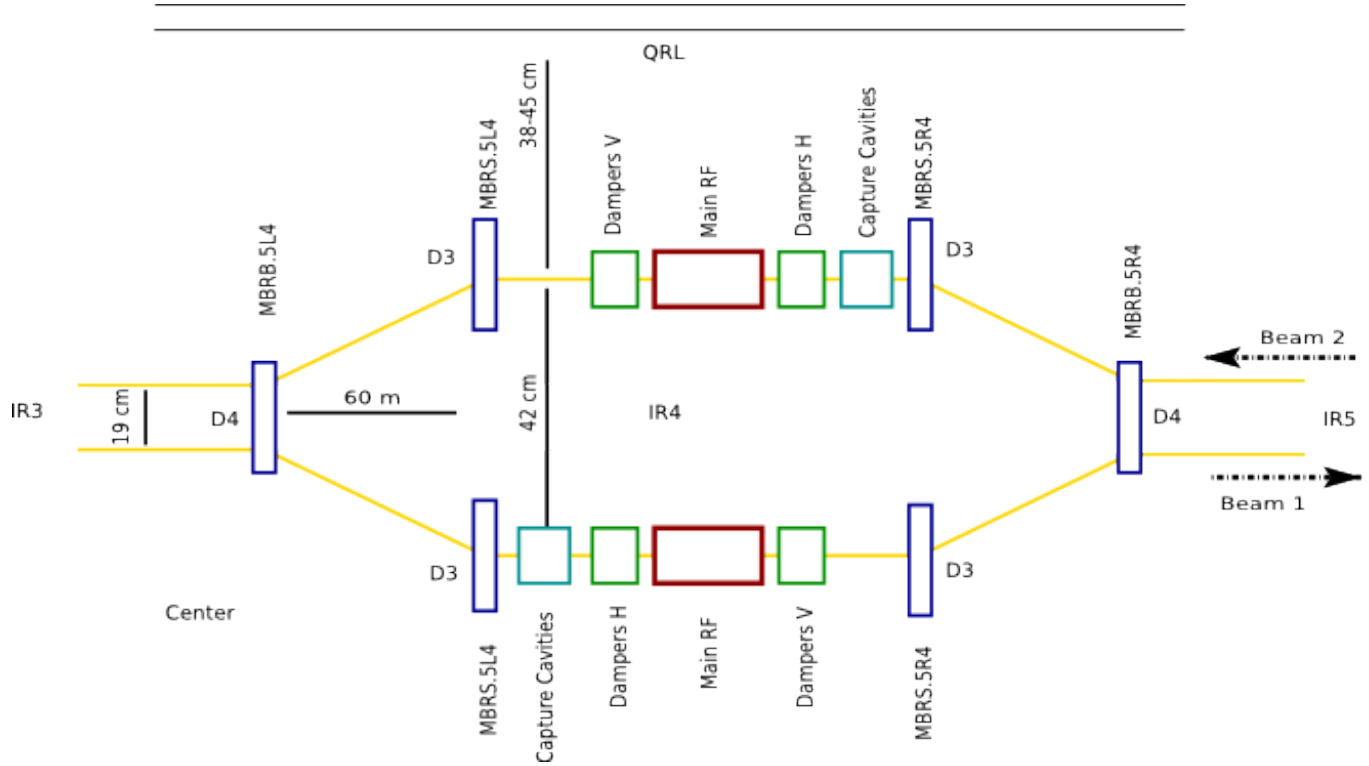


- Beam 1: IR3 $\rightarrow$ IR5 internal Q5 Left horiz. focusing
- Beam 2: IR5 $\rightarrow$ IR3 external Q5 Right horiz. focusing

# IR4 tunnel cross section left

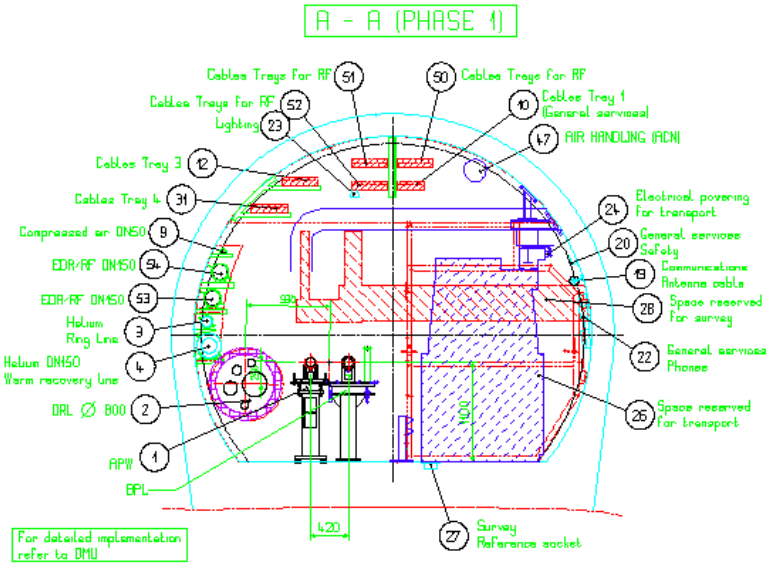


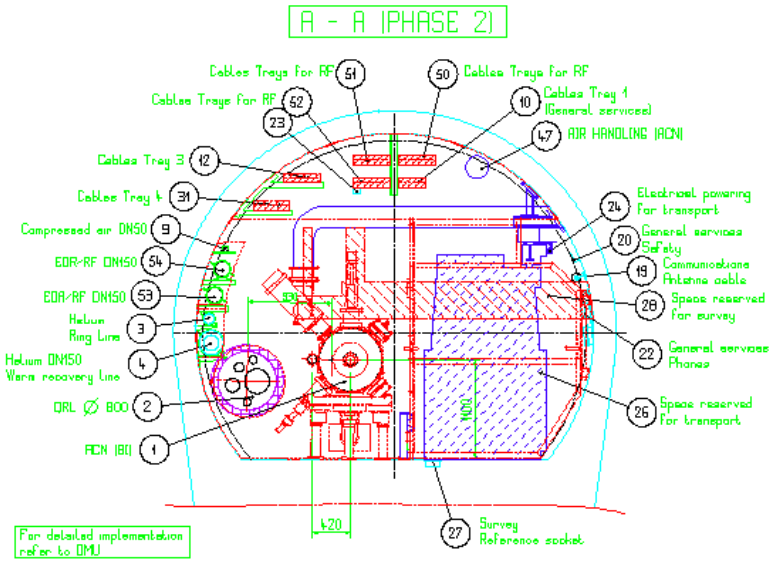

# IR4 tunnel cross section right

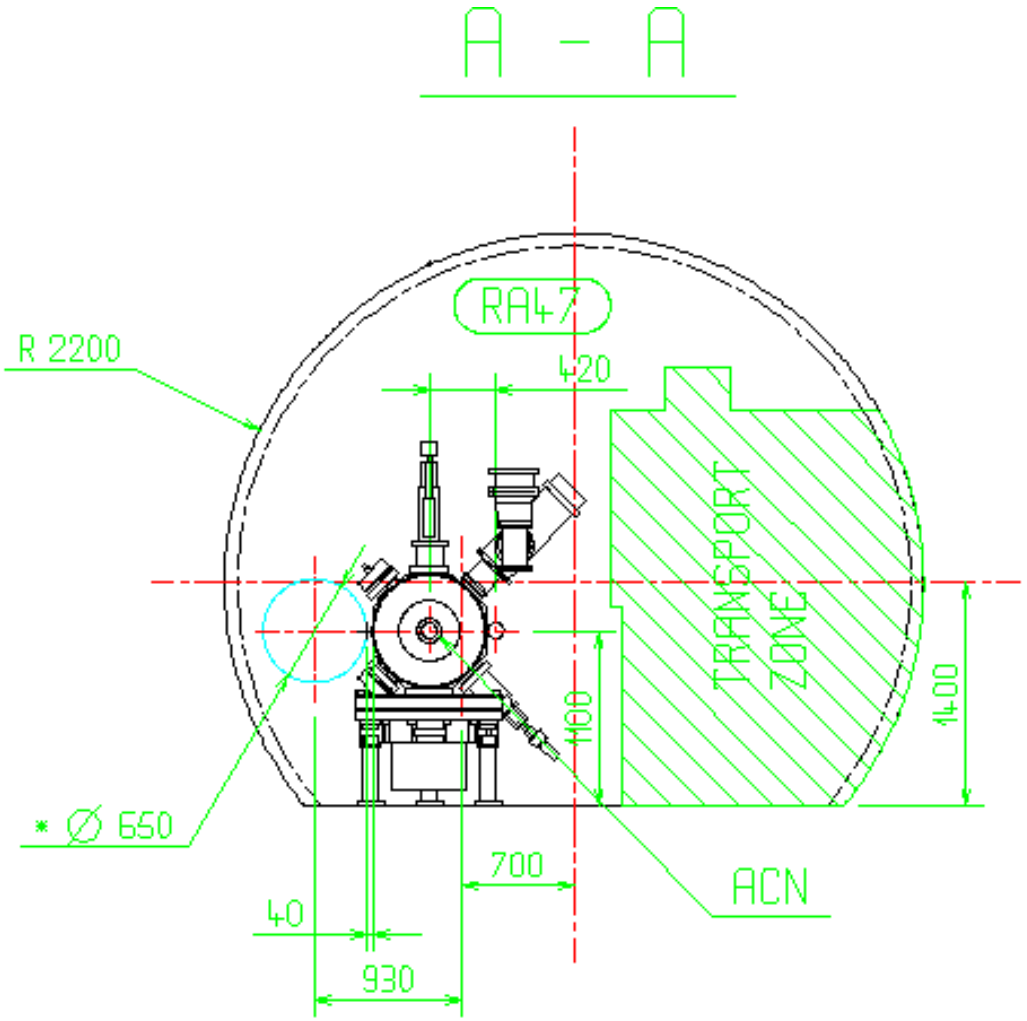


- QRL to beam2 axis: 380-450mm
- Beam 2 Pipe to beam1 axis: 376mm (420mm beam separation)

# IR4 rf section

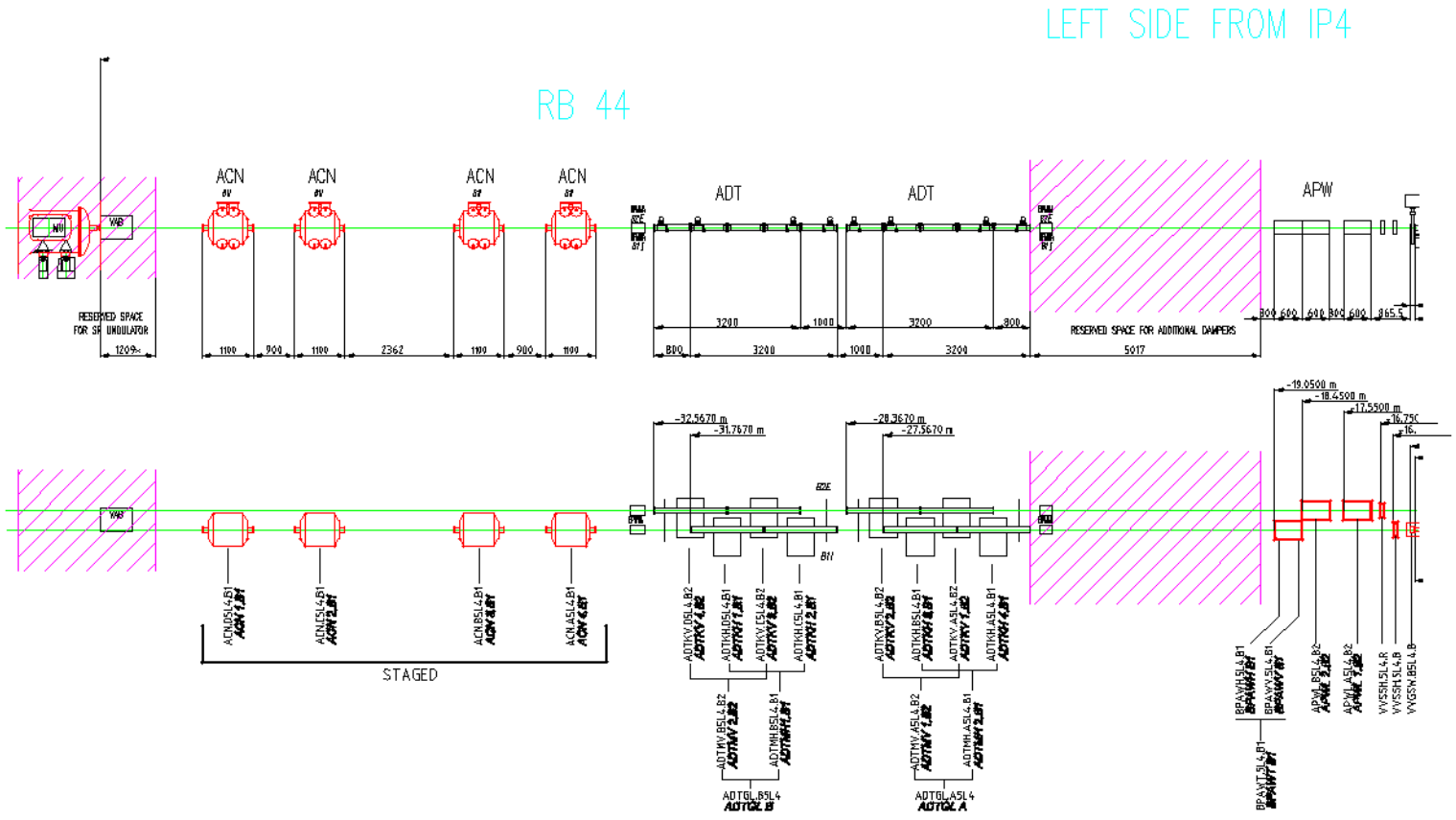


Option considered at the LHC-CC09 meeting:

- Capture cavities
- Dumper kicker

# IR4 begin of the dogleg

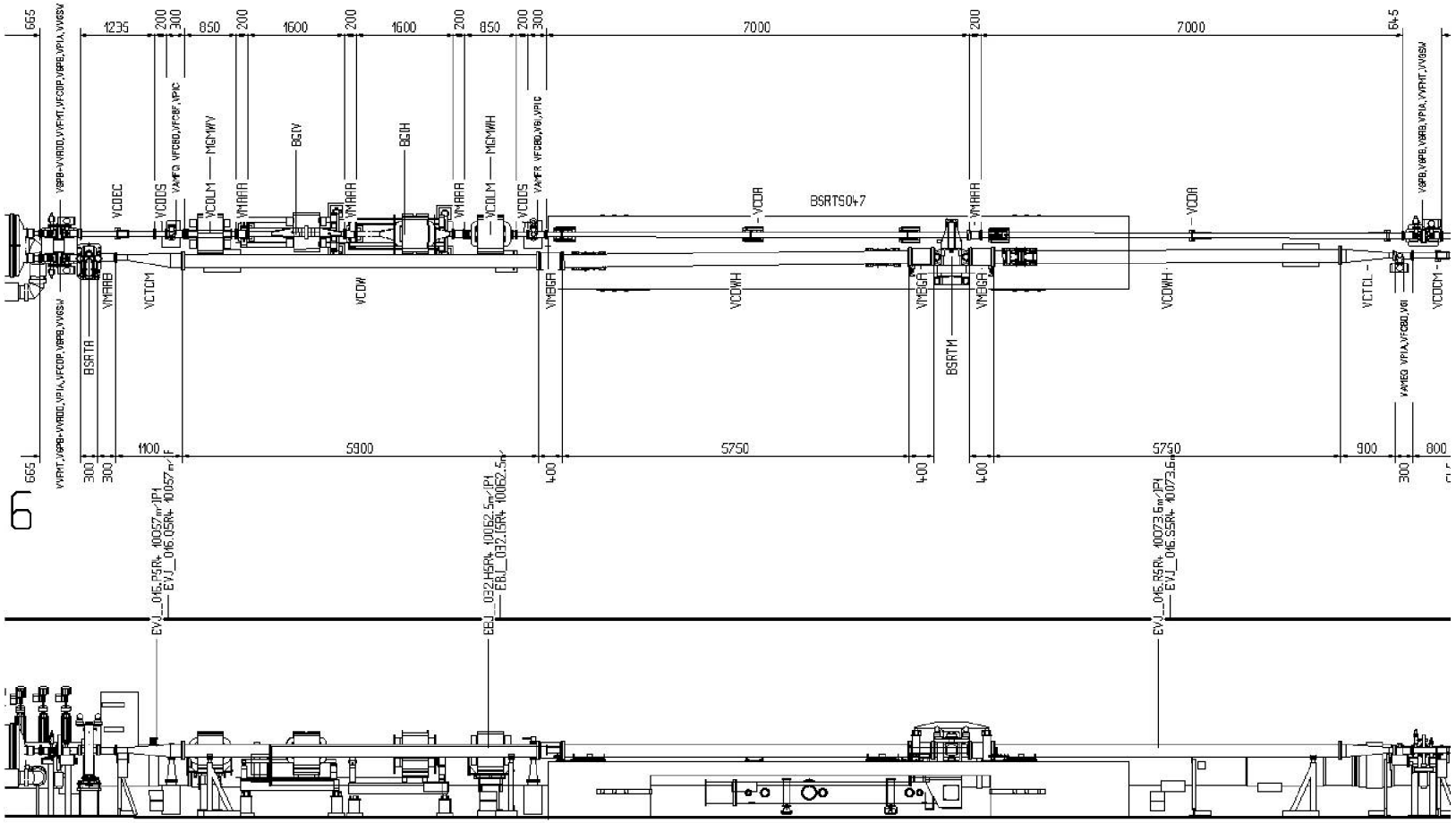


draft version of LHCLJ___0254 courtesy of M. Giovanozzi

# IR4 Dogleg options

Shift: Move D3,D4,Q5 rigidly towards Q6

- changes in QRL
- optics needs additional quads (maybe warm are sufficient)

Shrink: by increasing the angle of D3 D4 (higher field or additional magnet)

- change in QRL for D3 only
- no optics changes
- 10% of field gives $7 \cdot 2$ m

Inside:

- accept smaller beam separation.

# IR4 Dogleg options

Inside: cope with smaller beam separation after BGI (Beam Gas Monitor) or BSRT (synchrotron radiation monitor).

- no hardware changes
- better for optics
- after the BGI closer to D4
  - 320mm pipe to beam axis separation
  - interference with synchr. monitor
  - equipment under the pipes
- after the BRST closer to D4.
  - 275mm pipe to beam axis separation
- closer to D4 where beam pipe get smaller
  - 265mm pipe to beam axis separation

# Few quantities

Transverse distances:

- beam screen diameters (max beam size and halo) 52.8mm 62.8mm
- beam pipe diameters 84mm (220mm horizz for syncrh. monitor)
- beam separation (after D3) 420mm, empty space (295-214mm), 198mm

Dipoles:

- distance: 71.9m
- length: 9.450m
- field: 3.8T

# IR4 scenarios

- IR4 is a global option
- Could serve as a prototype test
- Could serve as operational solution as well if:
  - optics can be un-squeezed and
  - more than one cavity can be installed.

| Energy | $\beta^*$ | $\theta_{crossing}$ | $\frac{\mathcal{L}_{ho}}{\mathcal{L}_{nocrab}}$ | $V_{crab}$ | $\beta_{crab}$ | $\frac{V_{crab}}{V_{fullcomp}}$ | $\frac{\mathcal{L}_{cr}}{\mathcal{L}_{nocrab}} - 1$ |
|---|---|---|---|---|---|---|---|
| 7TeV | 30cm | 409urad | 1.60 | 2.5MV | 2.6km | 0.50 | $\sim$ 18% |
| 7TeV | 55cm | 302urad | 1.21 | 2.5MV | 2.6km | 0.90 | $\sim$ 13% |
| 5TeV | 42cm | 409urad | 1.34 | 2.5MV | 2.0km | 0.70 | $\sim$ 15% |
| 3.5TeV | 60cm | 409urad | 1.18 | 2.5MV | 1.3km | 1.00 | $\sim$ 10% |

# IR1-5 layout

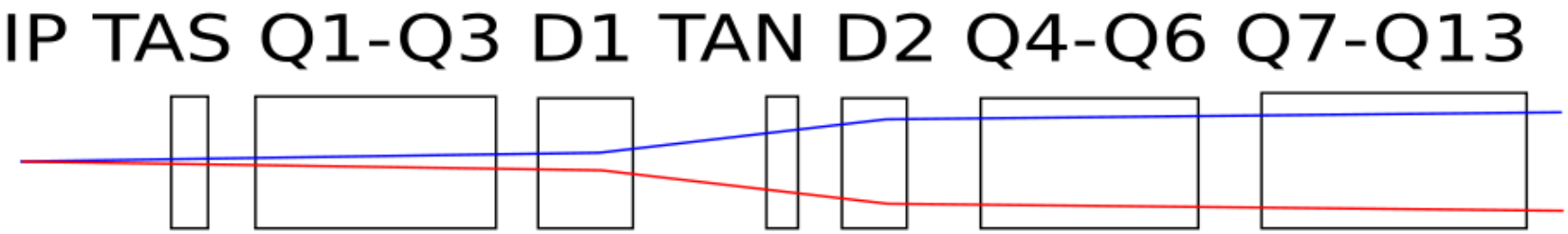
IP TAS Q1-Q3 D1 TAN D2 Q4-Q6 Q7-Q13

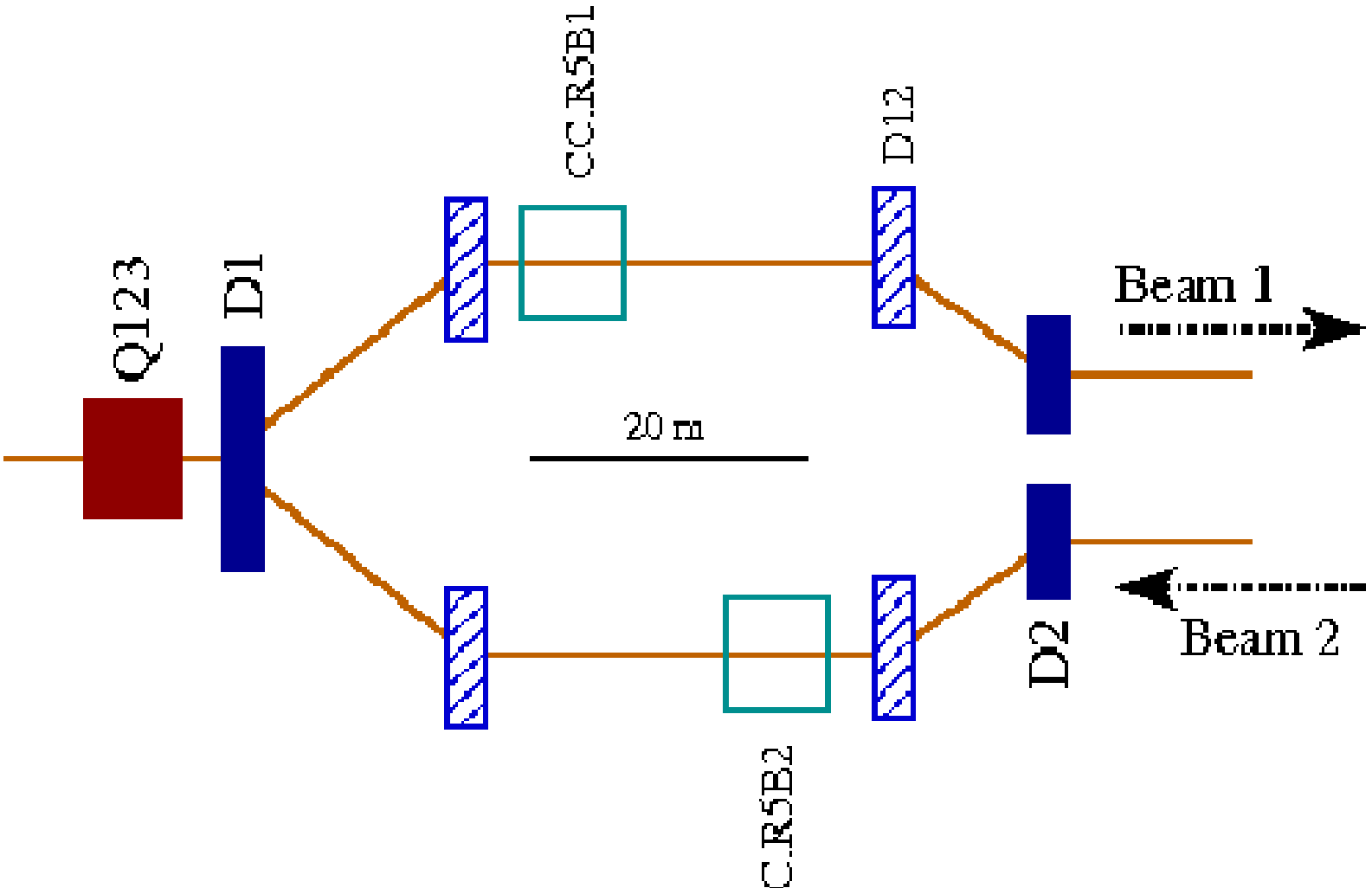
Q123
D1
CC.R5B1
D12
Beam 1
20 m
D2
Beam 2
C.R5B2

# IR1-5 layout

Compatible with local scheme.

New dogleg in between D1-D2

- challenging for the dipoles
- 224mm sep achievable
- neutral debries

After Q4 with very compact cavities:

- nominal separation
- beta function still high
- no neutral debries
- detailed layout analysis to be done

# IR2-8 scenarios

It is possible to think to a global scheme in IR2 or IR8 where the experiments needs less luminosity.

The IRs could be modified without the constraints of the low beta* upgrades (Longer triplets requires additional space).

# Conclusion

There is no perfect location for crab cavities in the LHC.

The trade off is between hardware modification and R&D effort to reduce the cavity side.

IR4 dogleg looks a promising compromise.

Very compact cavities open many other possibilities.