Crab Strategy After CC09 Review

R. Calaga, Nov 4, 2009

- LHC-CC09 Summary
- "Future" Strategy (LHC & SPS)
- LARP 2010 Focus

Ack: CC Collaboration, LHC-CC09 Participants

* Material taken from LHC-CC09 workshop speakers and session chairs

LHC-CC09

Charge

RF Concepts & down select a baseline cavity

Review beam simulations and establish specifications

Develop a strategy for phase II upgrade

Program

2.5 Days, 9 Sessions, 37 Talks

½ day summary session (international advisory board)

Active discussion

Participation

CERN (Accelerator + Experiments)

CC Collaboration: EuCARD (UK), KEK, LARP

JLAB, INFN, DESY

Setting The Scene

X-Angle bound to increase:

- Increased current
- Longer triplet (larger aperture quads) or decreased beta*.
- Large luminosity loss due to imperfect overlap

No beam dynamics show-stopper identified:

- but no hadron experimental proof of feasibility at large Piwinski angle.

Luminosity decay at 10^{35} is very fast (2 to 4 hours)

- Leveling with x-angle operationally simple
- Pile-up reduced (450 $\rightarrow$ 80-150)

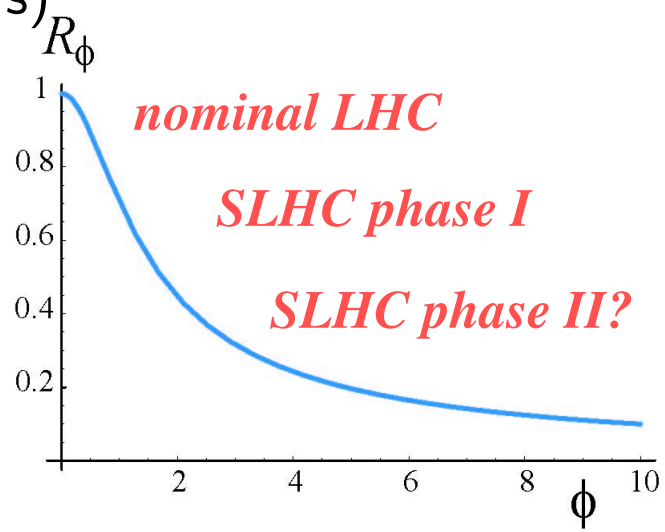

Setting The Scene

Detector upgrade:

- Major undertaking requiring 18 months shut-down, circa 2018
- ¼ BCHF/experiment, must start NOW.

Timing:

- Larger event number, background (neutrons,...) and doses
- Detector granularity → pile-up

Larger integrated luminosity for SLHC:

- Leveling very important
- Phase II in work, decision making → mid 2010

Setting The Scene, KEK-B

KEK-B Crabbing:

13 years R&D on CC, working stably 22 mrad Xing angle

Global CC scheme, no serious synchro-β effects, chromatic coupling, optics & aperture specific reduced performance

ΔQ_{bb}=0.056 (no CC), 0.09 (with CC), 0.15 (predicted)

Phase errors much less than required

Trip rate: Average 1/day (HER), 0 for LER (from up to 25).

Puzzling coherent oscillation with bb damped by RF phase shift

<u>Last opportunity for MD's with CC's this autumn</u>

Setting The Scene

Crab x-ing compatible with ultimate beam parameters

- proof of feasibility needed for 2010 (!) or 2014 (shutdown planning)

MD time in LHC:

- whatever can be done elsewhere should be done
- experimental program defined very well in all its dimensions.
- no risk can be taken with the LHC physics program
- Transparent CC scheme when not used.

CC's must be compatible with MP and collimation when used.

CC's must not limit other upgrade options (capture cavities or dampers)

Clear conclusions on feasibility, benefits and adverse effects for final scheme.

Layout & Beam Simulations

IR4 optics un-squeeze needed to relax crab voltage (smooth path possible)

- Bi-polar supplies for a few quads needed
- Aperture could be more efficiently used with change in location

Beam simulations

- DA, collimation hierarchy, loss maps and emittance growth acceptable
- 2nd order synchro-betratron resonances suppressed
- Reduced emittance experiment can make lumi gain ~25%

Noise experiments

- Beam-beam driven noise instability between Sigma & Pi mode.
- Crab dispersion was measured and excellent agreement with model

Momentum Cleaning with crabs (higher freq 2-8 GHz)

- Relax off-momentum optics, efficient cleaning, reduction of beta*

Cavity Development

HOM damping requirements outlined

No elliptical down-selection, instead guidance to aggressively pursue compact cavities

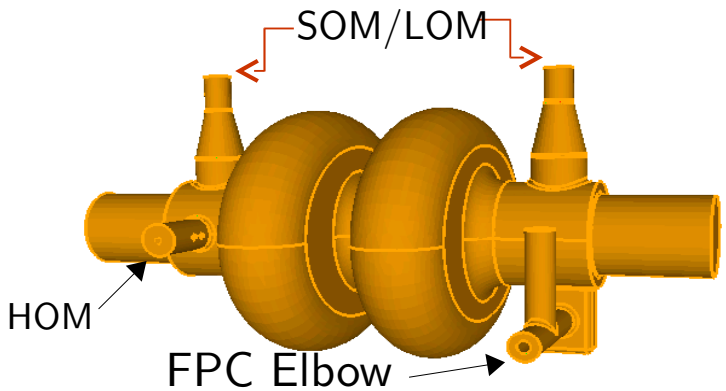

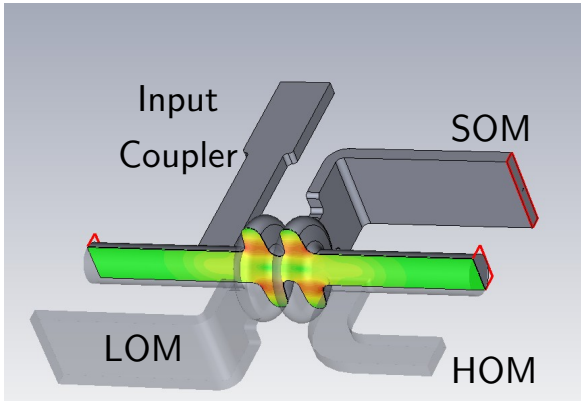

Hold R&D

Elliptical

Compact Candidates

Kota, KEK

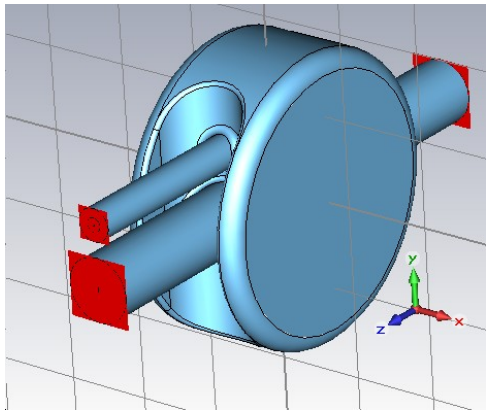

HWDR, JLAB,OD

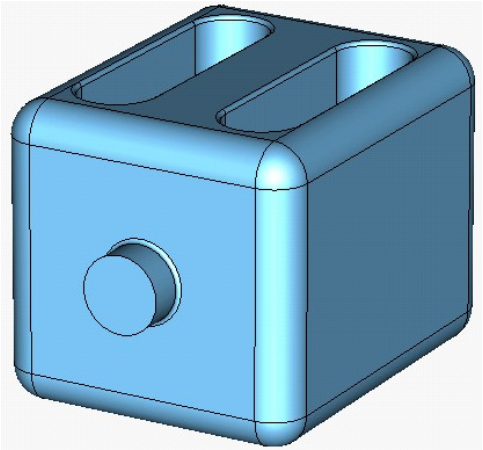

DR, UK, TechX

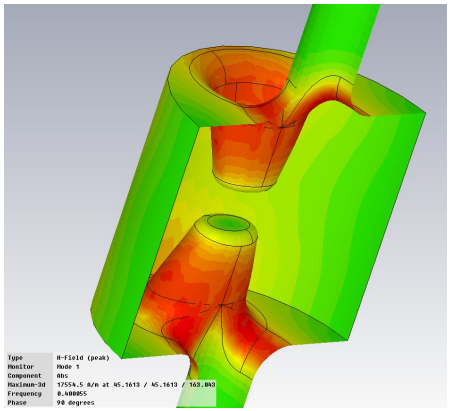

HWHM, SLAC, BNL

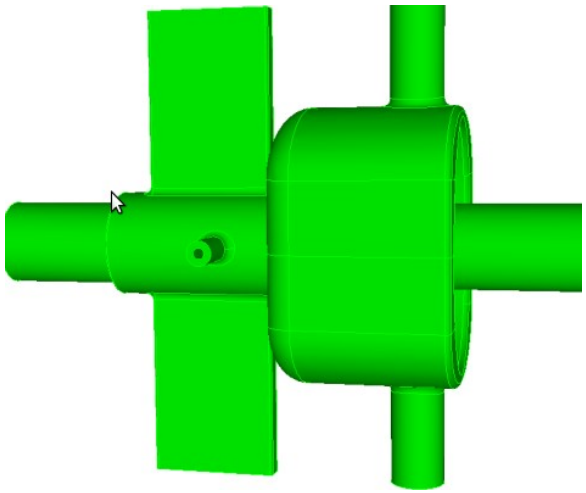

Additional Thoughts

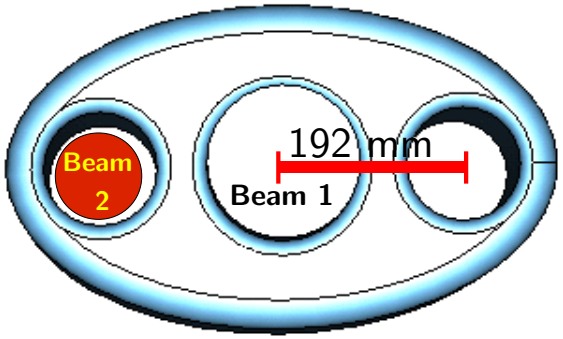

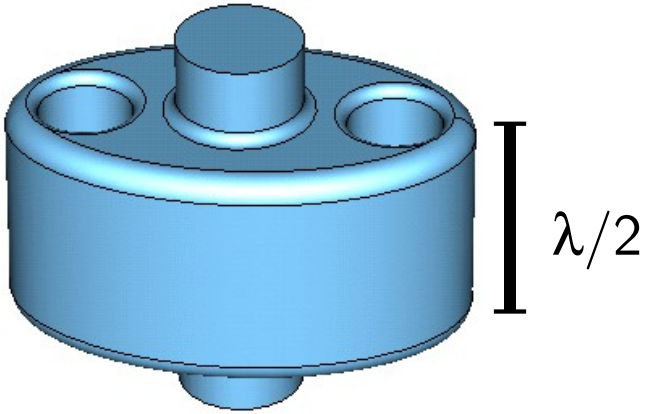

A thought: Use Jean's HWDR cavity in a different format

2nd beam pipe inside cavity shielded aperture* (can we ?)

Shape modification (or additional rods) to enhance the kick gradient

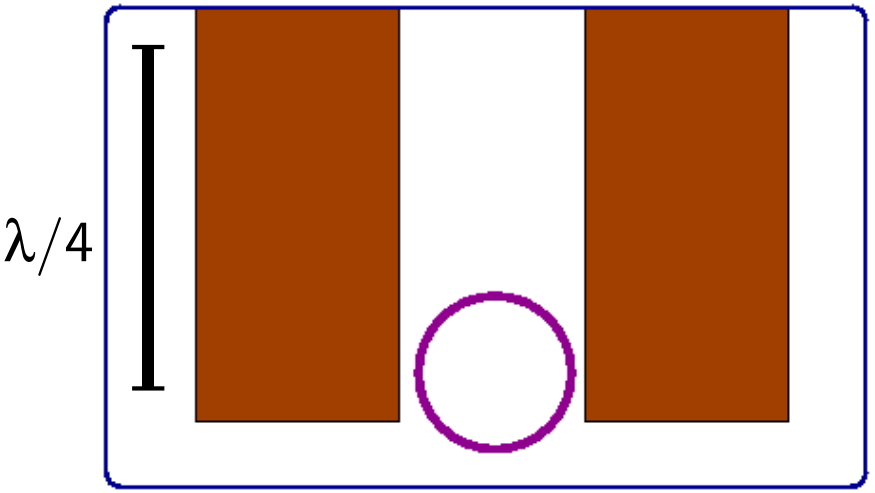

* ¼ wave double rod (QWDR)

* Ben-Zvi's idea

** Riccardo's idea

Cryostat Development

Non trivial He Vessel concepts

Multiple penetrations, thermal intercepts needed to reduce heat losses

Anchor point at main coupler, to minimize stresses/deformation

- Differential thermal contraction, control of all radial penetrations see the thermal gradient from 300K $\rightarrow$ 4.5-2K, multiple sheilds
- Tuner concept can become complex

2K operation delicate and needing careful shielding, easy to spoil advantage

- Heat losses of all extensions need evaluation
- Thermal cycling and integrity

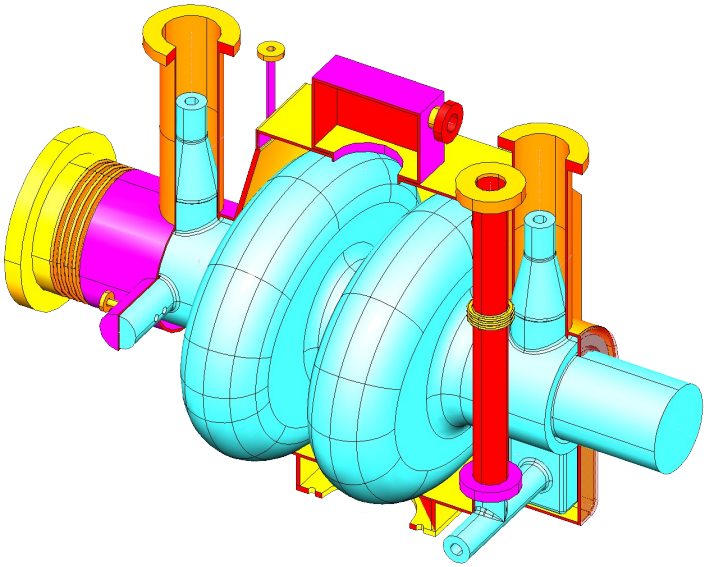

** Funding for cryomodule development essential

CC Integration, Prototype Tests

IR4 installation:

- Integration feasible, 700 kCHF(no man-power)
- Need LLRF, cabling, power lines, civil engineering, control systems etc..

RF power

- 5 – 30 kW (Qext: 10^6 – 5×10^5)
- 60 kW SPS amplifier under development, easy to acquire

Cryogenics

- 4.5K system simple, additional valves, 1 week installation + 150 kCHF
- 2K complex, 20 critical QRL cuts/welds, 6 weeks installation + 1 MCHF

LLRF

- Amplitude & phase feedback @FLASH $\rightarrow$ 0.01% & 0.01deg
- LHC may need factor of 5-10 improvement in phase noise

KEK-B Instrumentation (Sync light)

- Beam-beam deflection measurements confirm head-on collision
- Beam loading along the train, but very little impact on luminosity
- Crab voltage emipirically optimized for luminosity

Cavity/RF Commissioning

Cavity-Coupler processing

- EP & HPR stands available @KEK, no deterioration after cryomodule assembly
- SM18 test stand feasible, but upgrade to 2K, RF power, limited cryo

RF commissioning

- Software tools available for main RF, ~1 day setup time
- Power coupler conditioning in-situ ~ 1 week (LHC cavities)

Commissioning plans

- Crabs can follow already existing plans (for ex: Ion commissioning)
- Affect all phases of the LHC, collisions at lower energy & anti-crab ?
- Conflicts with existing procedures & intrumentation requirements1

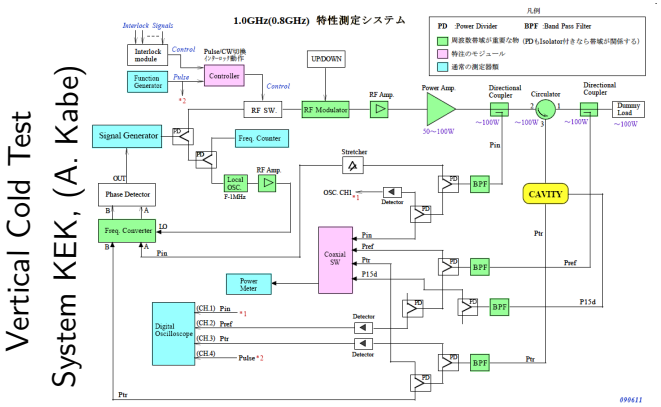

Vertical Cold Test System KEK, (A. Kabe)

Machine Protection, 350 MJ !!

Approx 200 interlock systems

Best/worst case scenario: detection - 40µs (½ turn), response - 3 turns

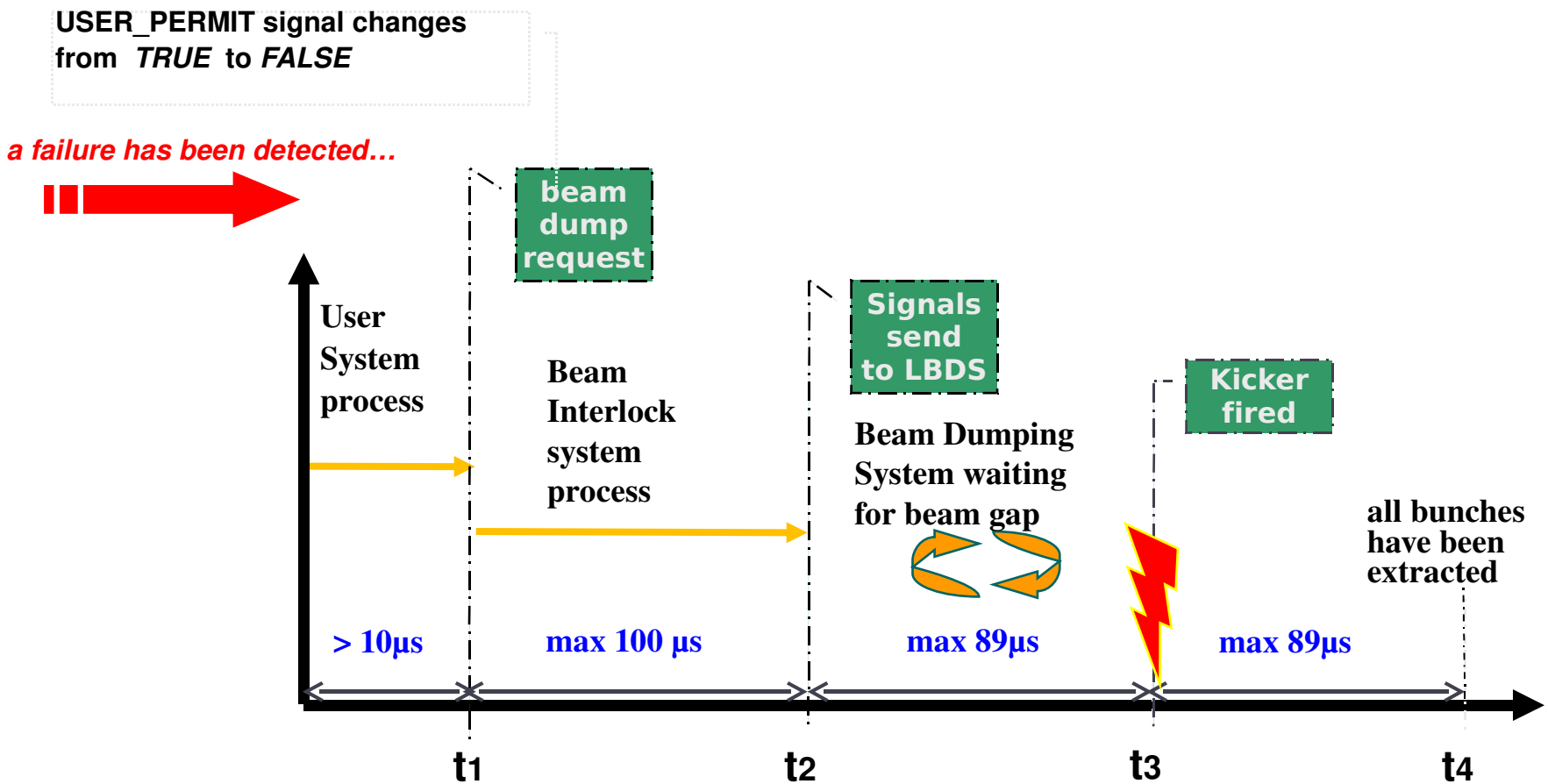

Critical item to be studied in FY10

Failure Scenarios

<u>Single turn</u> failures

- Cavity quench
- Transmitter trip, no active feedback
- Abrupt crab phase changes

Differences between local Vs global schemes

- Global: Beam to cavity
- Local: Cavity to cavity & beam

No passive way to guarantee machine protection (Tuckmantel)

- For example higher Qext will not help slow the failure time constant
- Voltage slope determined by unchangeable constants (R/Q, Δx, I...)

Phase II Strategy

Upgrade options aim at beam-beam limit

- Larger triplet & radiation hardness (β^*, l, ε, x-angle)
- Crabs compatible with ultimate luminosities + lumi leveling

Phase II CC

- All upgrades should consider CCs
- Local option $\rightarrow$ larger aperture, dispersion, additional dogleg dipoles $$$
- Compact cavities will relax these concerns, compatible with global+local

Local option integration

- Severe space constraints already for phase I tests near IRs
- Tight interfaces between triplets, shielding, vacuum & survey
- Ultimate cooling capacity limited to 500W @1.9K
- Separation dipoles may not be easy and similar to D1 & D2

Crab Scenarios

- Global
  - Installation in the capture cavity region
  - Use the IR4 Dog-Leg
  - Lock Ph. Adv IP1→IP5
  - Machine protection with single cavity

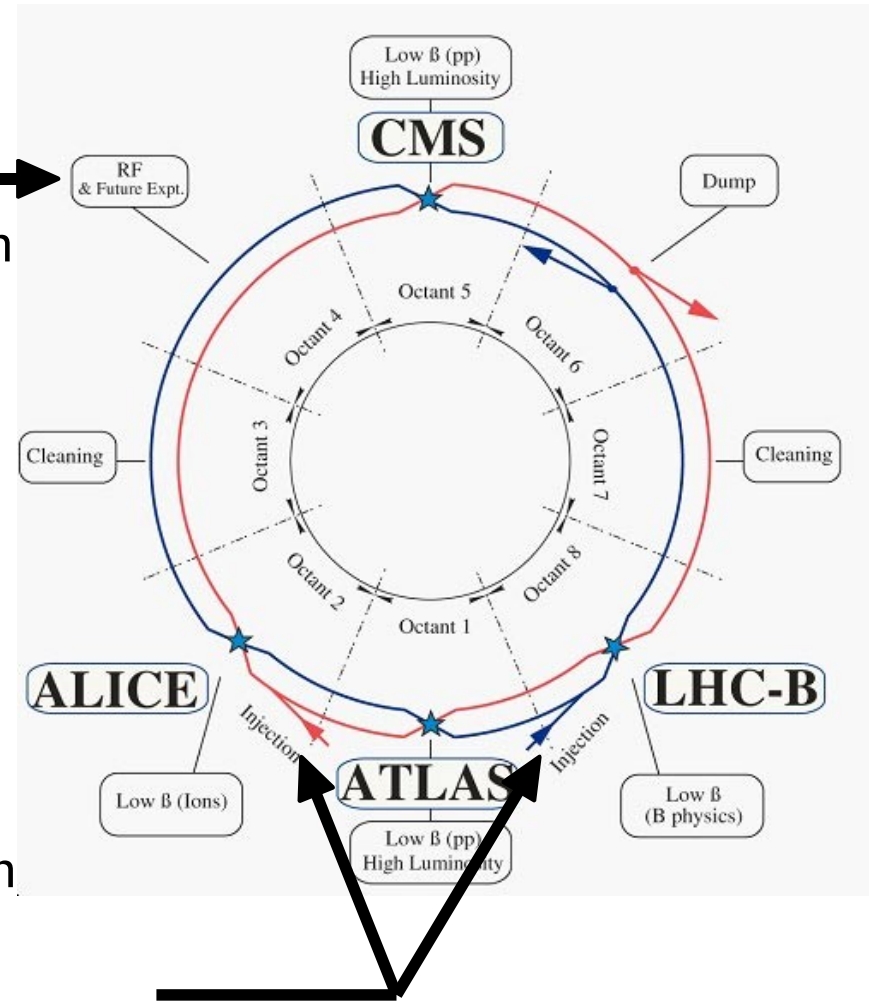

- Local (Phase II current baseline)
  - Dog-legs (if needed) in IR1/IR5 Region
  - Adv: rest of the ring "untouched"
  - Machine protection with 2-cavities

Aperture, Local Scheme

Magnet	Aper-H [mm]	Aper-V [mm]	Tesla	L [m]
D_1	134	110	7	10
D_{11}	106	70	7	10
CC	120-140 (84 required)		-	20
D_{12}	78	60	4	10
D_2	69	53	3.85	10

- Large aperture cavities for sufficient margin (orbit, optics, etc..)
- Instrumentation & active feedback (orbit & phase control)
- RF infrastructure and cryogenics

Courtesy R. Tomas

Global Extension, IR4

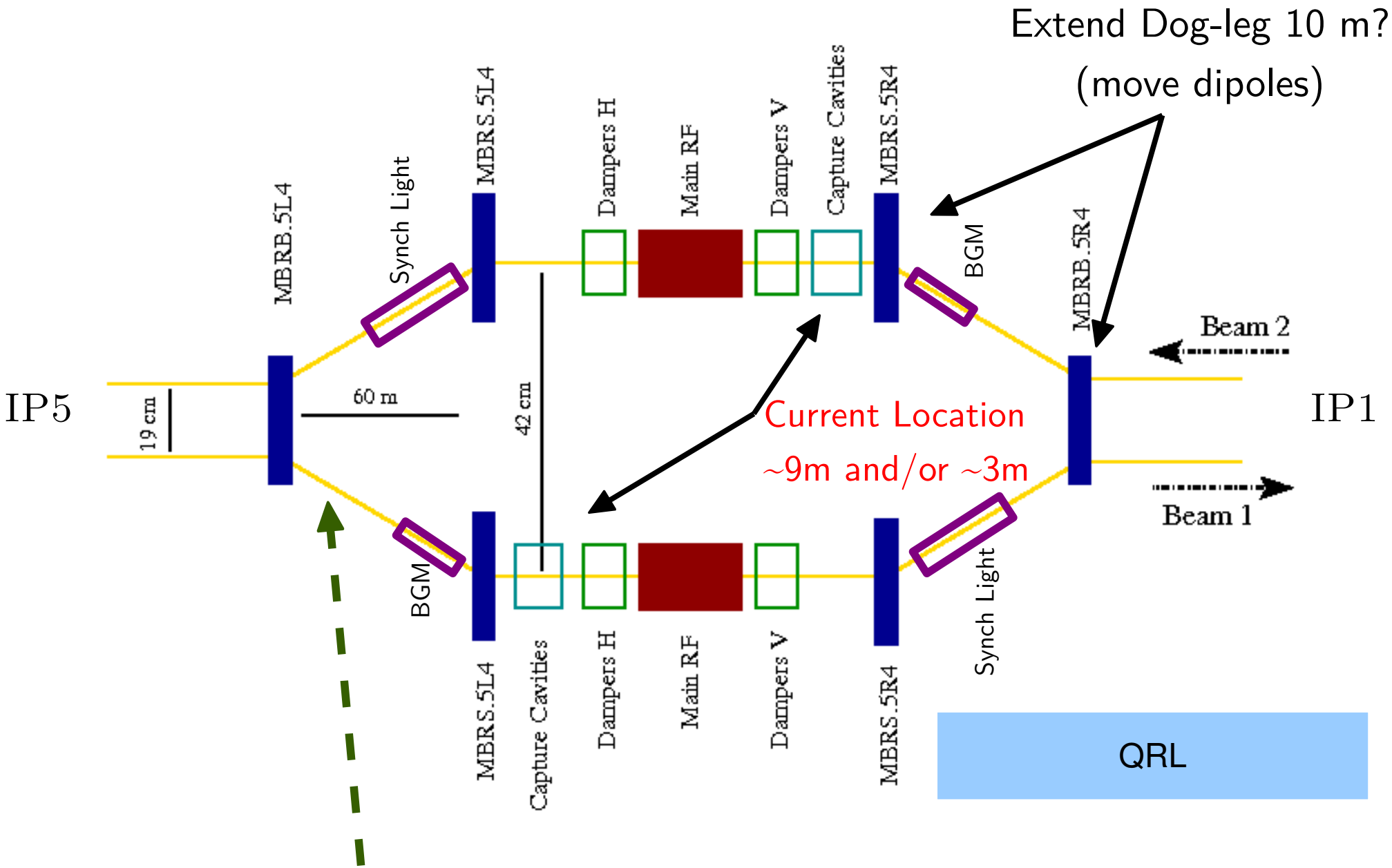

Other potential location (~30-22 cm separation)

Less problematic for Beam 1 due to QRL, compact cavities better

Aperture, IR4 Dogleg

Magnet	Aper-H [mm]	Separation [mm] (beam-beam)	Beam Pipe, B2	L [m]
D_3	69	420	40	9.45
CC	84	220-300	40-100	10
$D_4 + Q5$	73	192	40	15.5

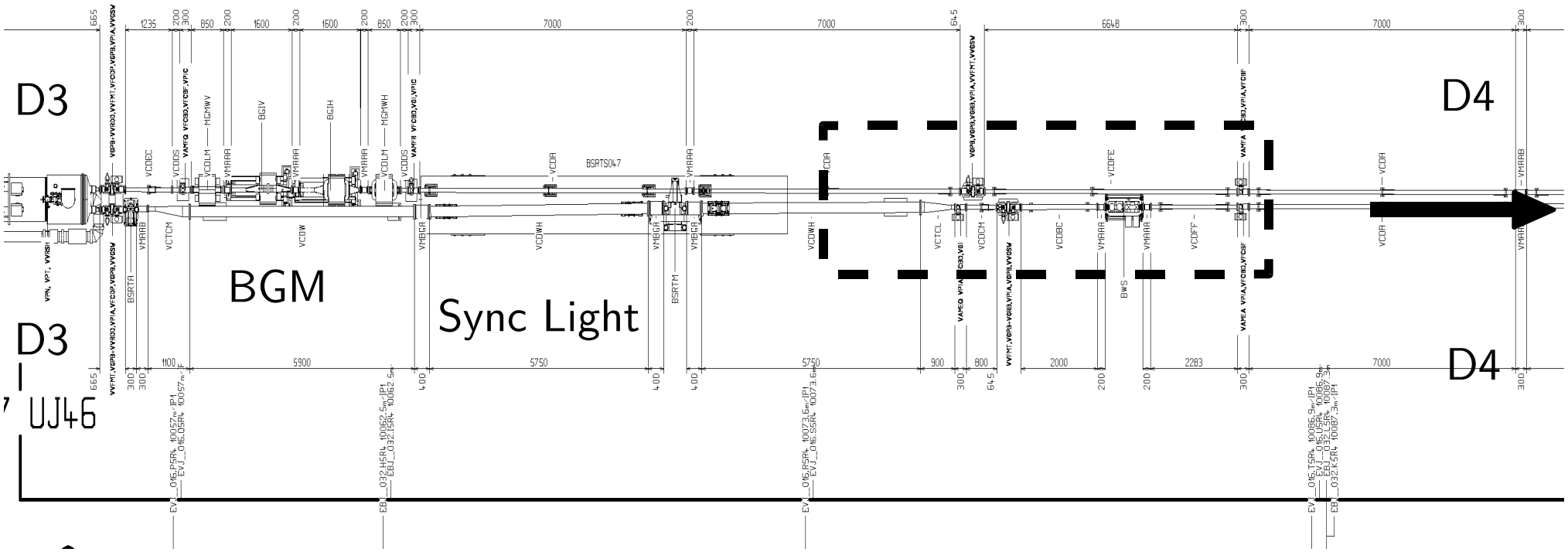

Cost Estimate

- Phase I
  - Cryomodules: \$6M + 20% contingency
  - LHC Infrastructure: 1-1.5 MCHF (2K or 4K)
    (QRL, Amplifier, civil engineering, controls etc..)
- Phase II
  - Cryomodules: \$ 20M + 20% contingency
  - LHC infrastructure: >10 MCHF (30 MCHF ?)

For comparison: Detector upgrade for phase II $\sim$ 0.5 BCHF

CERN Statement, Myers

1. Following the success of KEKB, CERN must pursue the use of crab cavities for the LHC, since the potential luminosity increase is significant.

2. A final crab-cavity implementation for the LHC has not yet been settled. Both “local” and “global” crabbing schemes are still under consideration for the LHC upgrade phase II. Future R&D should focus on compact cavities which are suitable for both schemes.

3. One possible show-stopper has been highlighted: machine protection, which is critical for LHC. The effect of fast cavity changes needs to be looked at with high priority. Mitigation schemes will be studied.

4. Another important issue is the impedance. During acceleration, the detuning, strong damping need to be examined carefully.

5. High reliability of the crab cavities is essential; the trip rate should not perturb LHC beam operation.

6. Validation cavity tests in the LHC itself are not deemed essential. It is considered plausible to install a new system in the LHC without having tested a prototype in the LHC beforehand.

7. Demonstration experiments should focus on the differences between electrons and protons (e.g. crab-cavity noise with beam-beam tune spread; impedance; beam loading) and on reliability & machine protection.

8. A beam test with a KEKB crab cavity in another proton machine is considered useful, meaningful and sufficient (for deciding on a full crab-cavity implementation in LHC) if it addresses the concerns.

9. Possible modifications of LHC IR4 during the 2013/14 shutdown should be studied to evaluate the feasibility of installing and testing crab-cavity prototypes, and of accommodating a possible global crab-cavity scheme.

10. The timing of the crab-cavity implementation should be matched to the short and long-term goals and to the overall CERN schedule, and be in phase with the experiment upgrades.

11. The crab-cavity infrastructure should be included in all other LHC upgrades scenarios.

12. Crab cavities can increase the LHC luminosity without an accompanying increase in beam intensity, thereby avoiding negative side effects associated with high intensity and high stored beam energy. This opinion has been endorsed by the general-purpose high-luminosity experiments.

** Thanks to all the work from CC-Collaboration

KEK-B Cavities In SPS

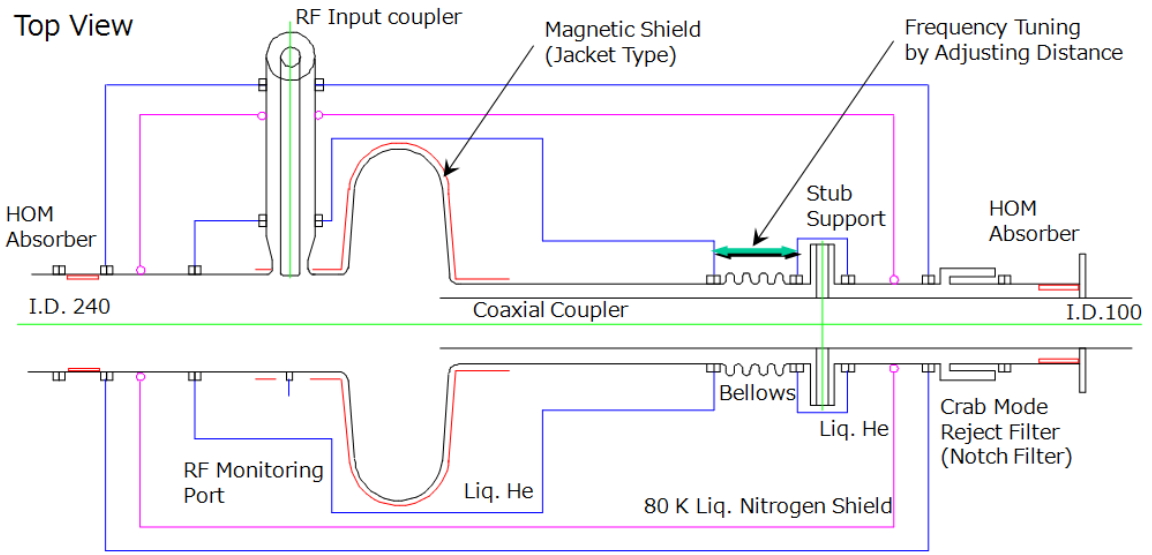

KEK Freq: 508.9 MHz

SPS frequency: 510.6 - 511 MHz

Energy swing: 26 - 450 GeV

Dynamic swing: 100 - 200 kHz

Power: 50-120 kW (Qext: 2×10^5, 2.55 kHz BW)

Operational tuner stroke ~100 kHz

Maximum possible ~200 kHz

Speed: 1 kHz/s (active feedback required)

Impact on SPS, WG

Location: LSS4 (old cryo equipment) else LLS5

- Cryogenics (under investigation)

Added impedance

- Beam stability (Fixed target, CNGS, LHC)

Additional instrumentation

- LHC BPMs, head-tail monitor, emittances: need specifications

RF Power & Controls (under investigation)

Civil Enginnering issues

- Cavity aperture: 94-200 mm diamater (left-right) – compatible with SPS
- Cryomodule length: 5m (flange to flange)
- Cryomodule radius: ~0.5-1m (need to verify additional protrusions)
- Cryomodule weight: ~5 tons

SPS Tests Objectives

Feasibility of crab cavities in a hadron machine (circulate)

KEK-B cavity performance

- Static & dynamic frequency tuning, impedance, ramping, reliability

Machine protection, interlocks and worst case scenarios

- For example: one turn failure (voltage or phase)

Beam instrumentation specifications

- Measurement of optics, emittances, beam losses, etc...

Safe beam operation (low intensity) & reliability

- Beam tests, measurements (orbits, tunes emittances, optics, noise)
- Collimation, impedance (intensity increase), beam-beam effects (BBLR)

Intensity dependent measurements (emittance blow-up, impedance)

Beam loading with & w/o Rf feedback & orbit control

LARP Activities, 2010

BNL – R. Calaga

Machine protection studies (with CERN)

Establish SPS tests requirements and goals with CERN & KEK)

Coordinate LARP-SBIR compact cavity development, Jan2010

SLAC. LBNL – Z. Li, D. Li

Develop a baseline compact cavity-coupler concept $\rightarrow$ SBIR

HOM damping, power couplers

Multipacting, tolerance studies, beam-beam studies (J. Qiang)

FNAL – Y. Yakolev

Multipacting and mechanical studies (independent)

Cryomodule concept development for baseline compact cavity

Jlab – J. Delayan (Outside LARP at present)

Compact cavity development and demonstration

** Aim: "Conceptual" design report before LHC-CC10 (Dec 2010)