Fermilab

Status on LARP LHC Schottky

Ralph J. Pasquinelli

April 27, 2006

LARP LHC Schottky

- ***Electrical issues***
  - *Ding Sun designed pickup and waveguide launchers*
  - *Decided to use 12th harmonic of 400 MHz RF for tracking Local Oscillator @ 4.8 GHz*
  - *Preliminary system block diagrams complete*
  - *Testing in the Tevatron to investigate performance*
  - *System bandwidth needs to be 200 MHz minimum for bunch to bunch operations*

Fermilab LARP LHC Schottky

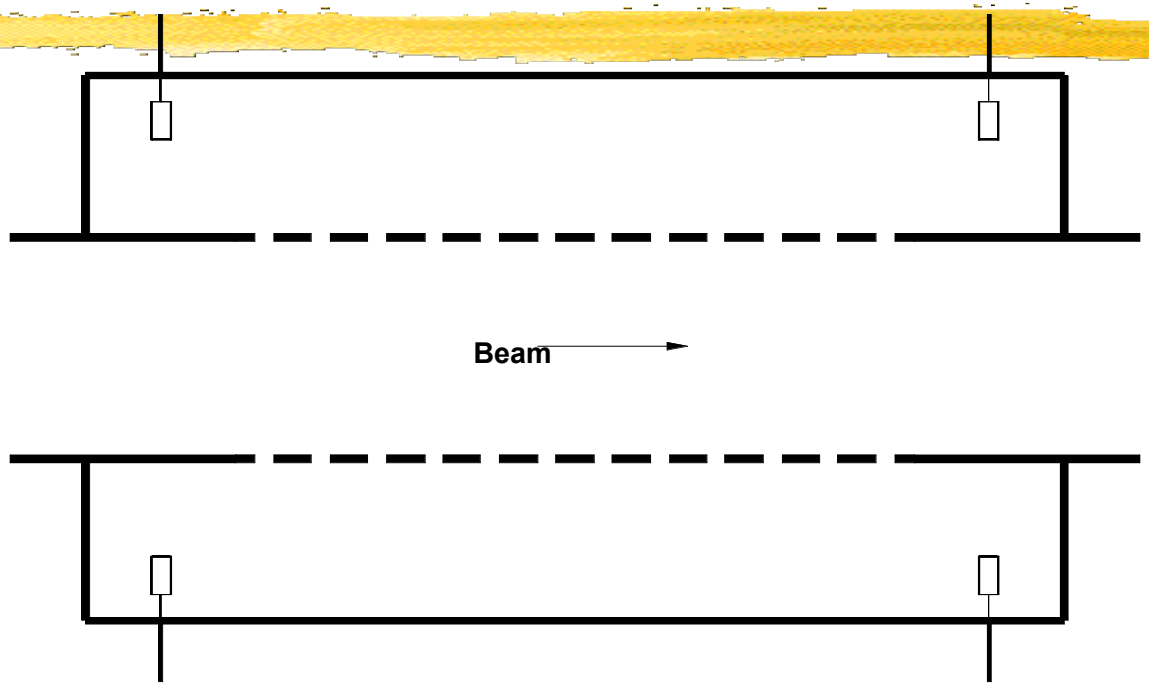

Figure 1. Schematic drawing of Schottky pickup

Table 1. Parameters of LHC Schottky Pickup (unit: mm)

Slot length	Slot width	Slot Spacing	Number of Slots	Waveguide width	Waveguide height	Beam pipe width	Beam pipe height
20.52	2.032	2.032	246	47.549	22.149	60.00	60.00

LARP LHC Schottky

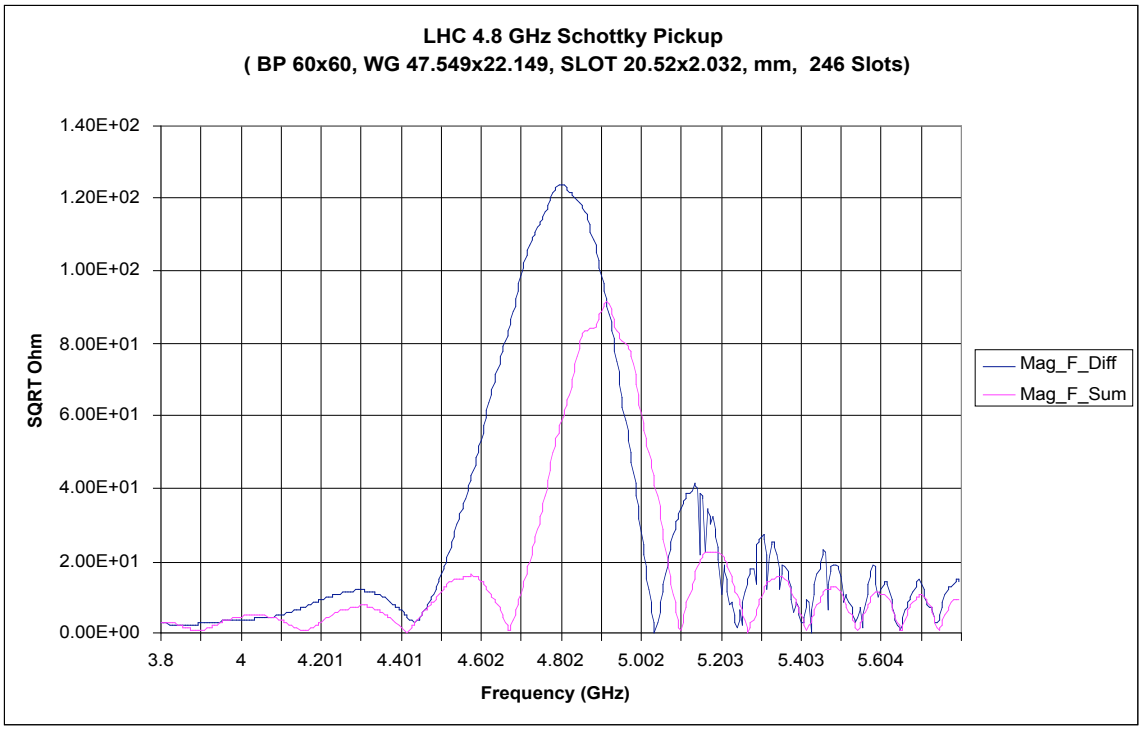

Figure 2. Impedance of LHC Schottky pickup

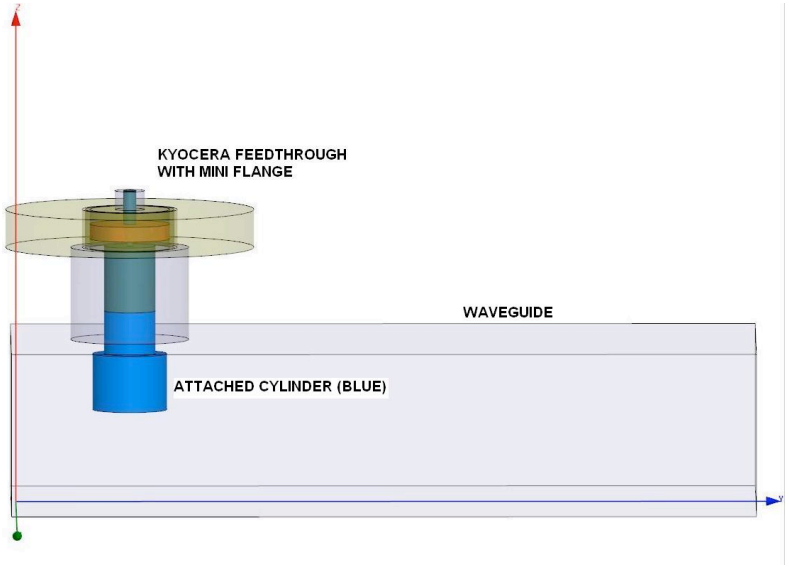

Figure 3. Mode launcher (waveguide – coax adapter) of LHC Schottky pickup

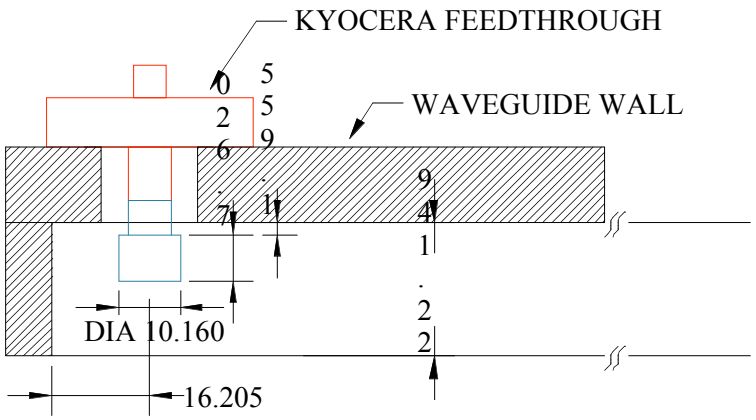

Figure 4. Parameter of mode launcher (unit: mm)

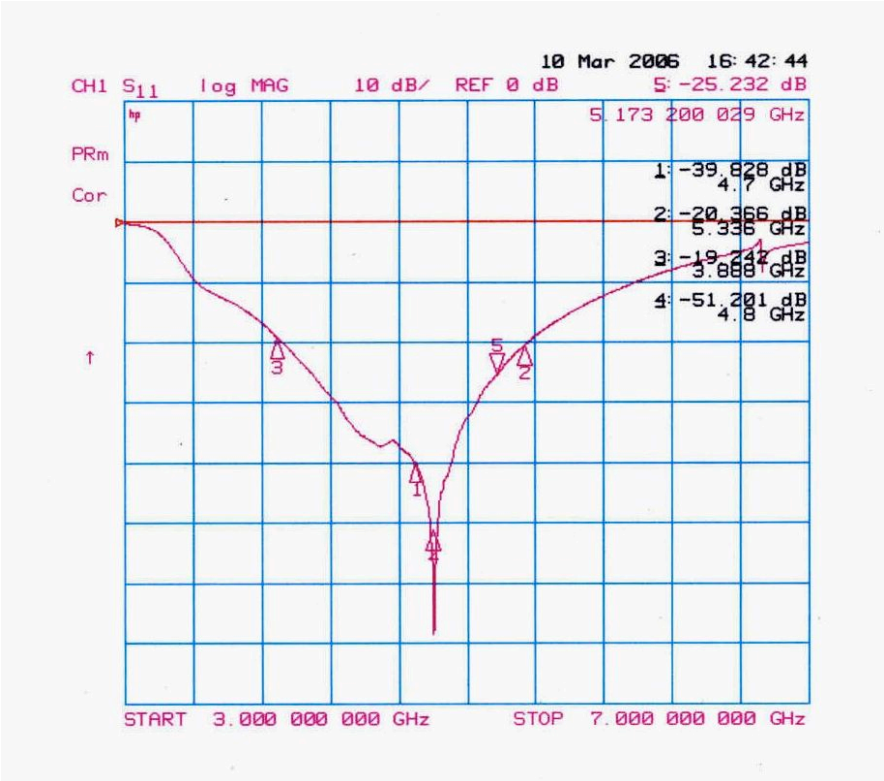

Figure 5. Measured S parameter (S11) of mode launcher

Fermilab LARP LHC Schottky

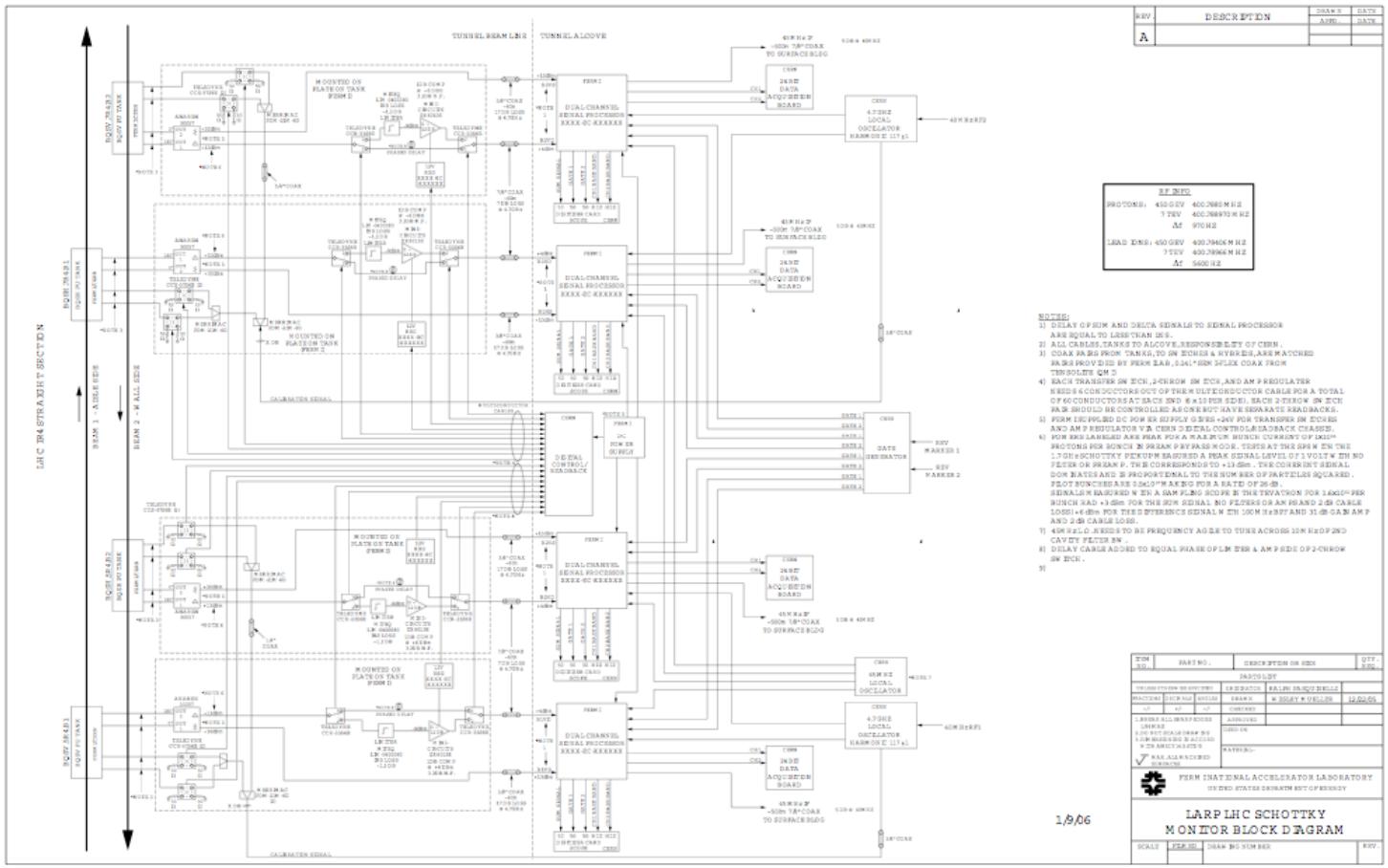

Fermilab LARP LHC Schottky

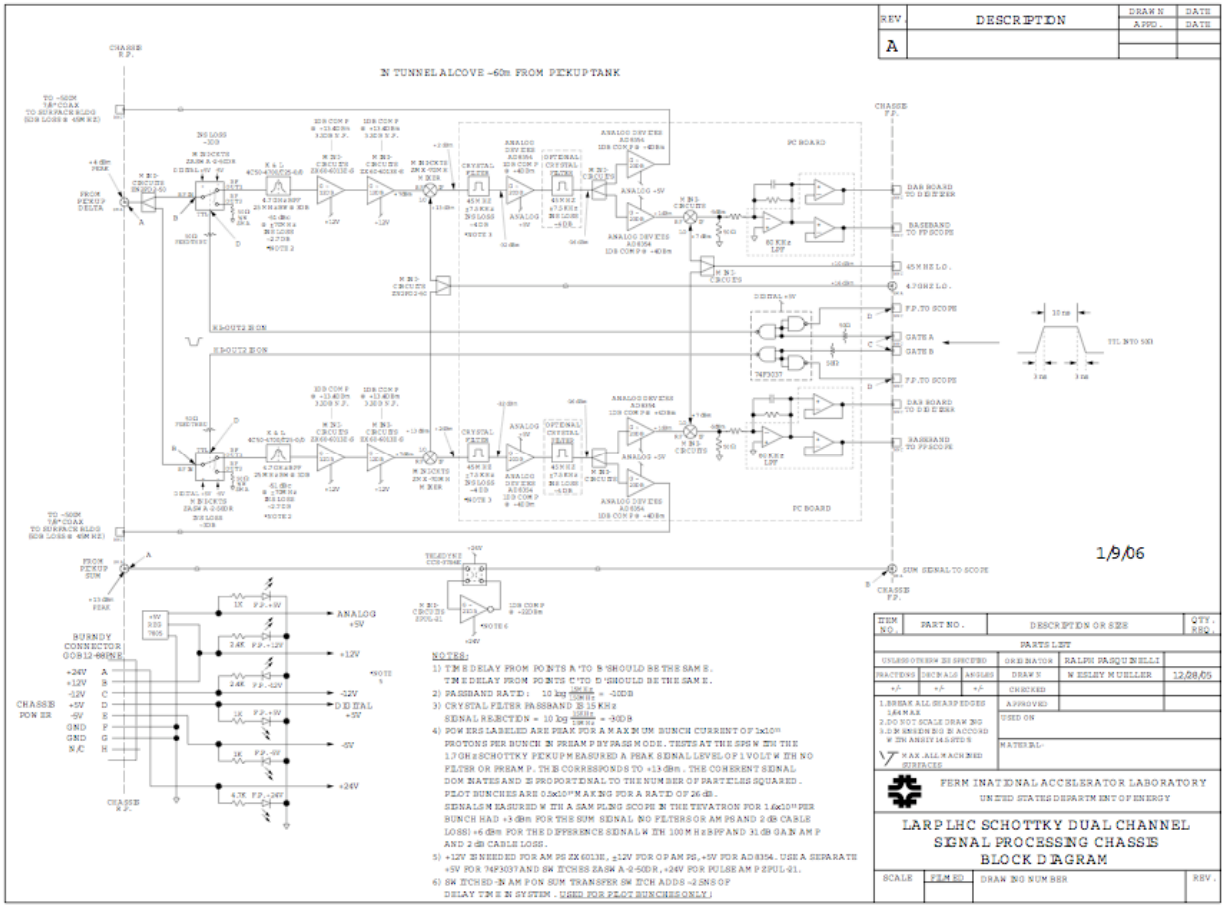

LARP LHC Schottky

Tevatron Single Bunch Horizontal Protons

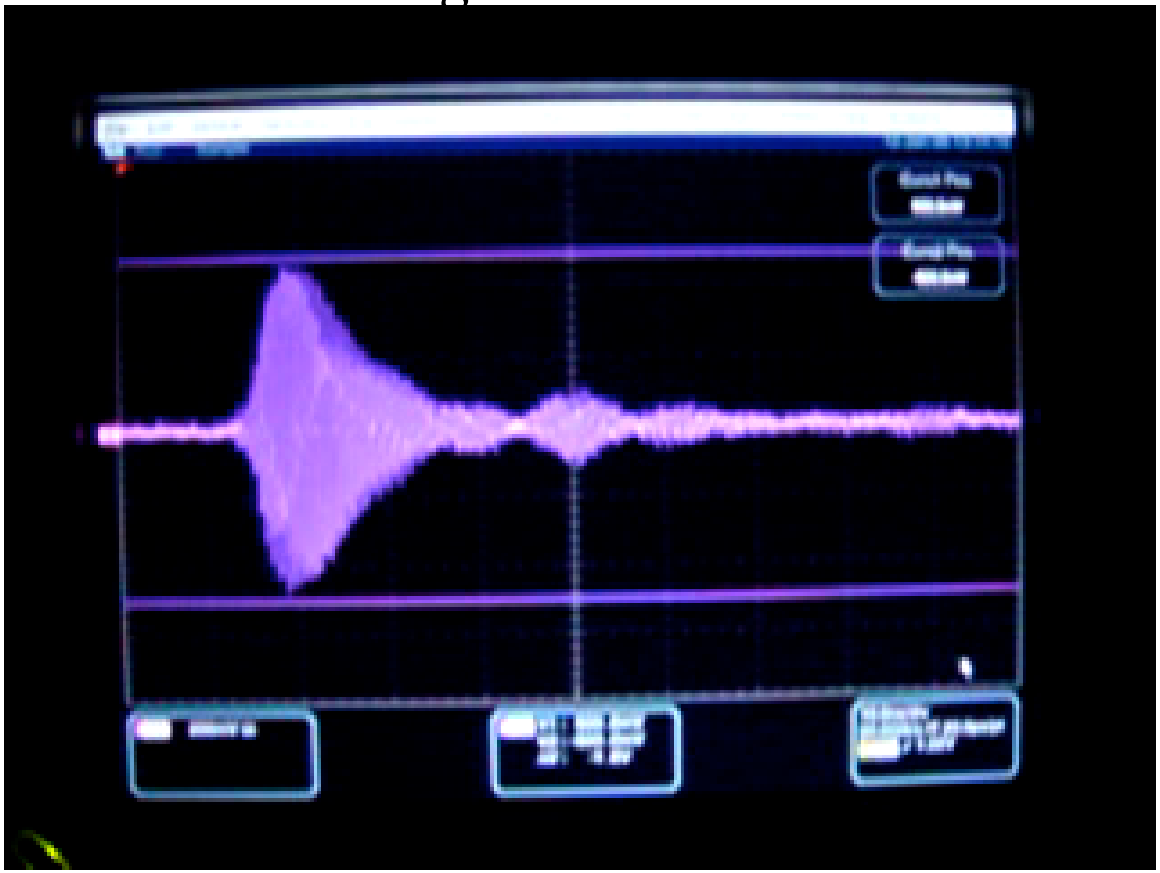

60 Hz Modulation on Tevatron Schottky Signals

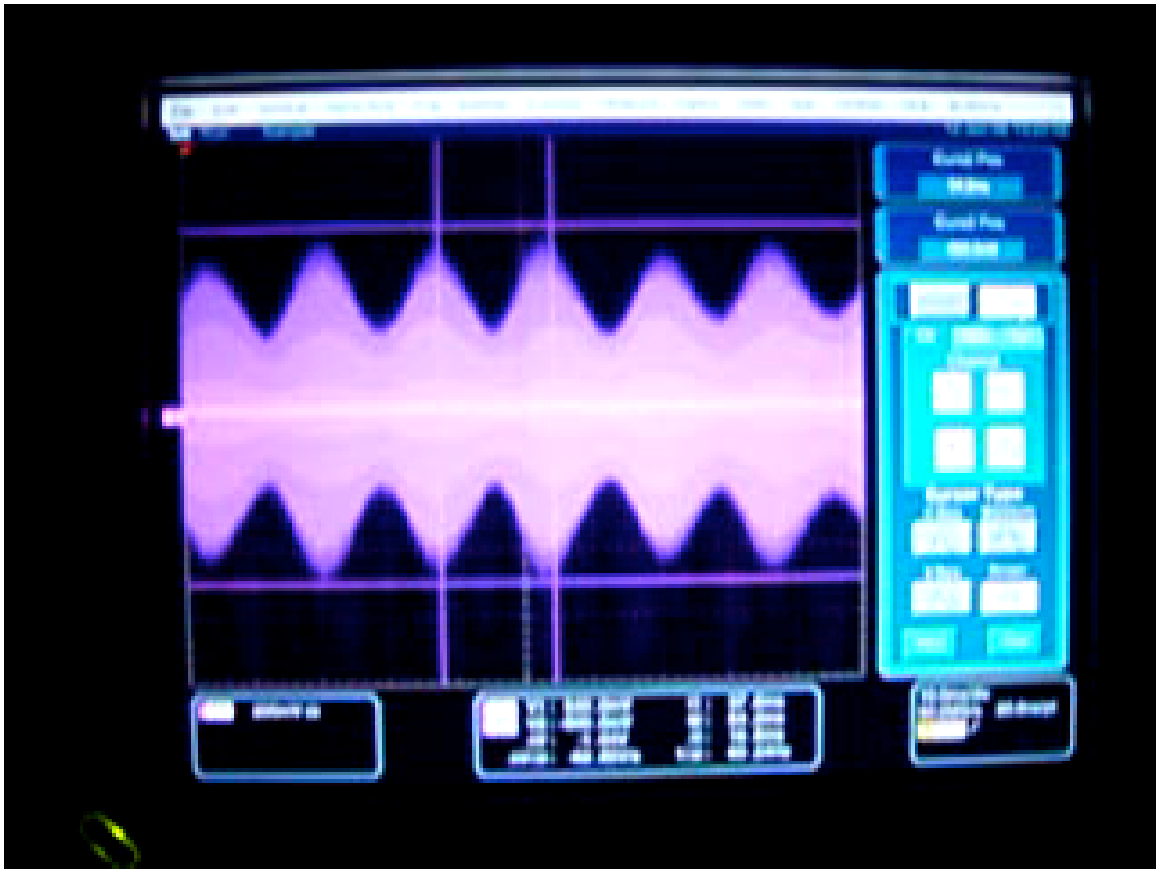

LARP LHC Schottky

- *Mechanical issues*
  - *Vacuum vessel to be exactly 1500 mm long*
  - *Schottky pickup is designed for 4.8 GHz*
  - *Drawings sent to CERN for final review*
  - *NO absorbers due to Z/N beam heating*

Fermilab

LARP LHC Schottky

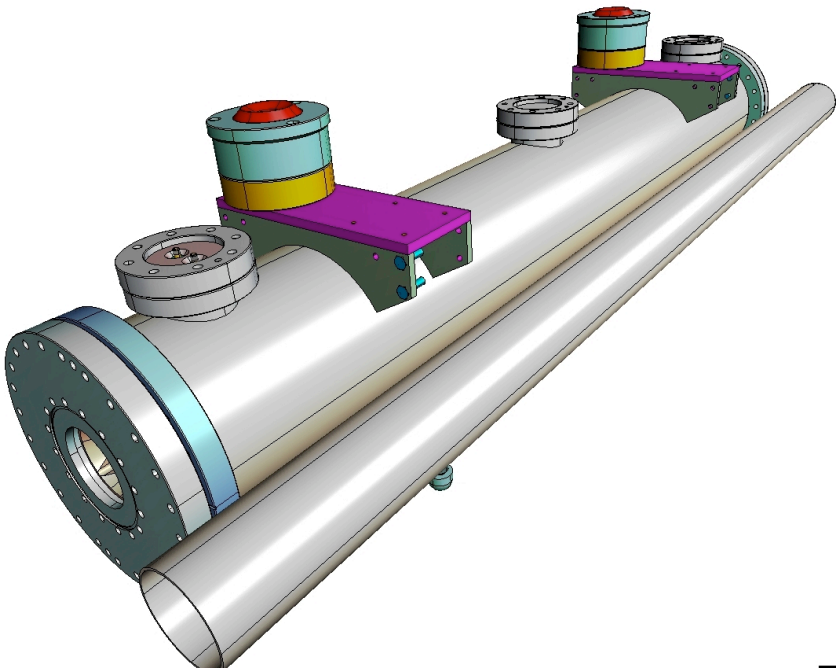

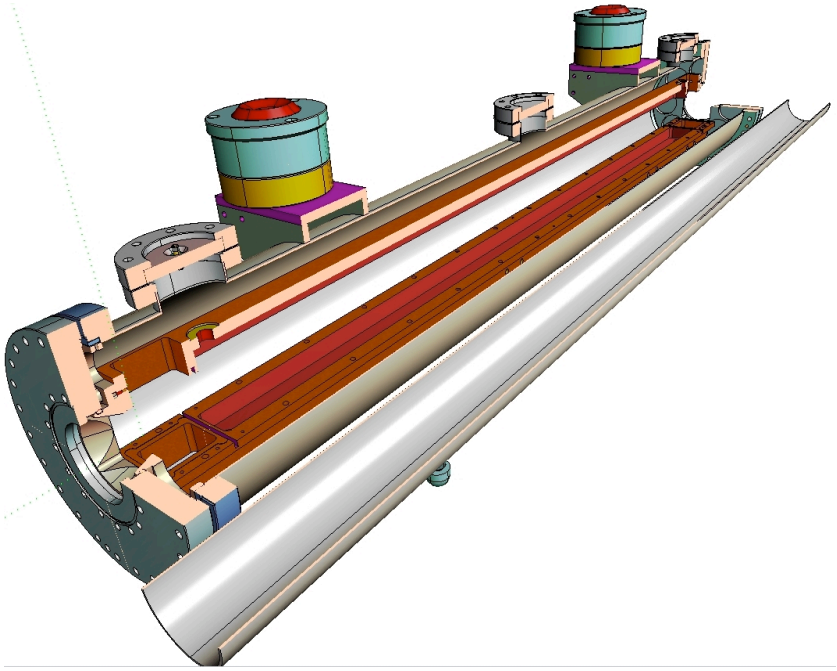

LARP LHC Schottky

Cross Section of Pickup and Adjacent Beam Pipe

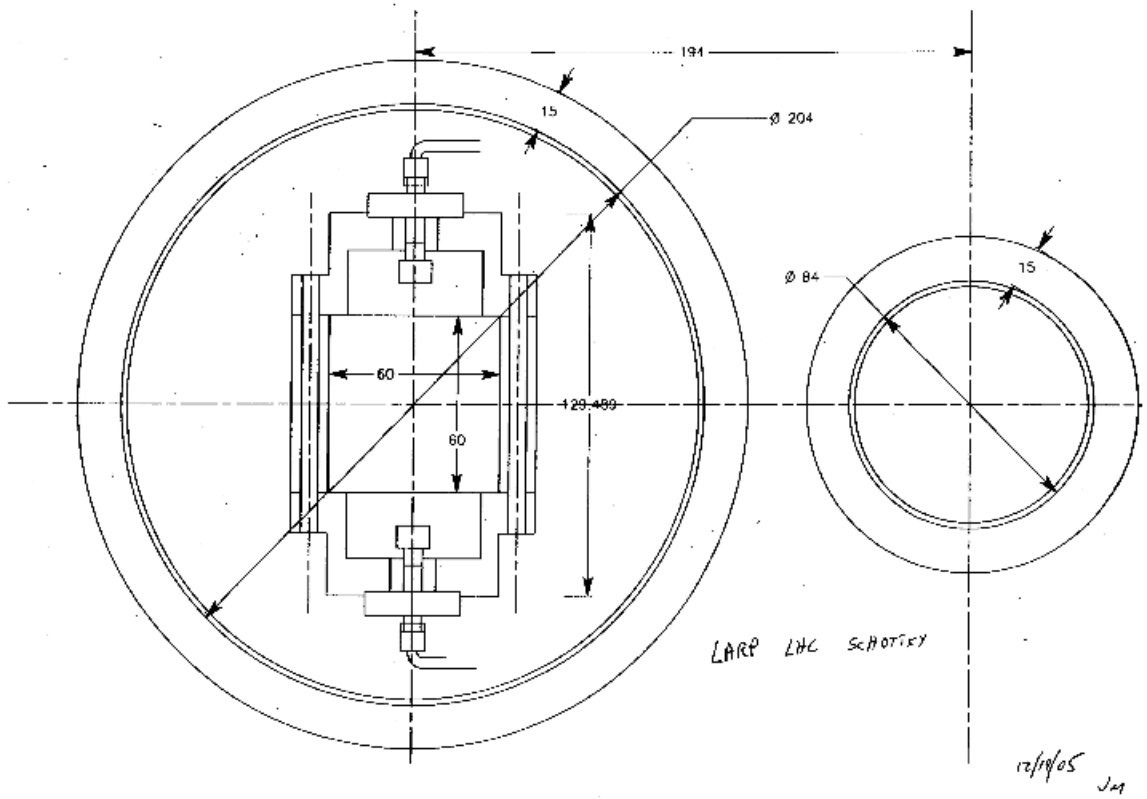

Fermilab LARP LHC Schottky

Vacuum Vessel Layout

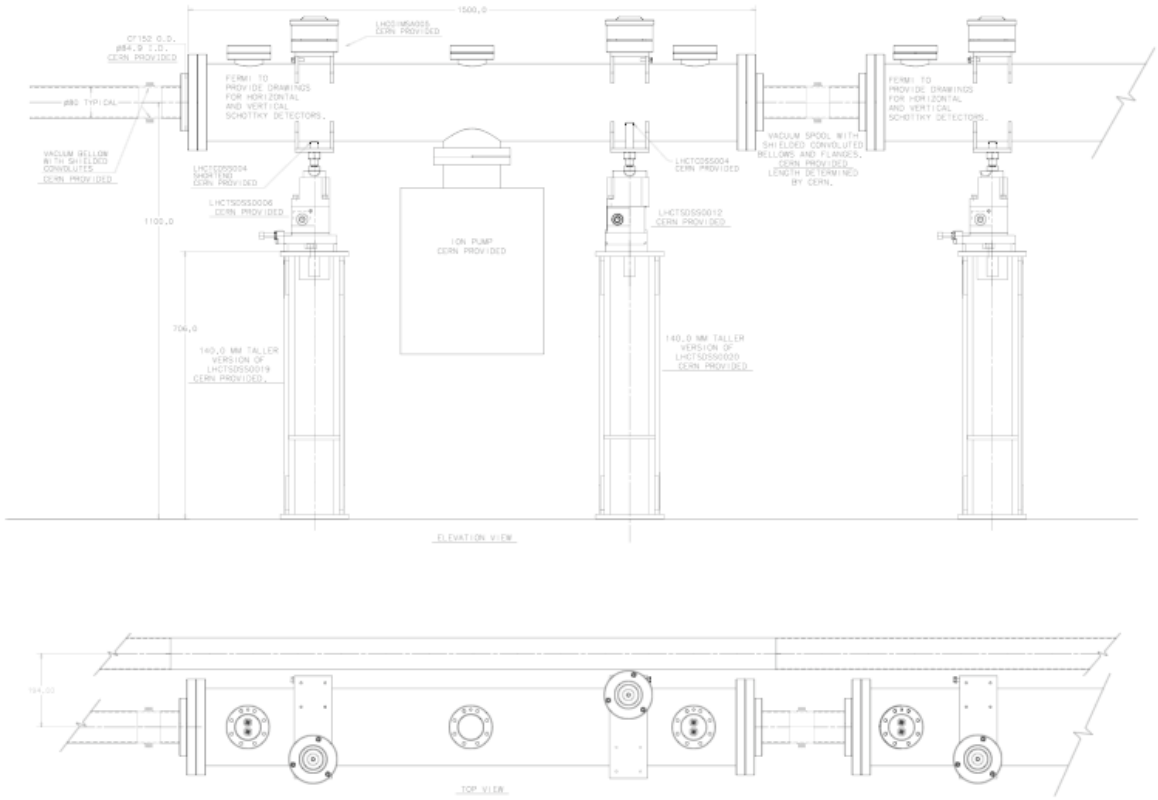

Fermilab

LARP LHC Schottky

Coax Cable Assemblies

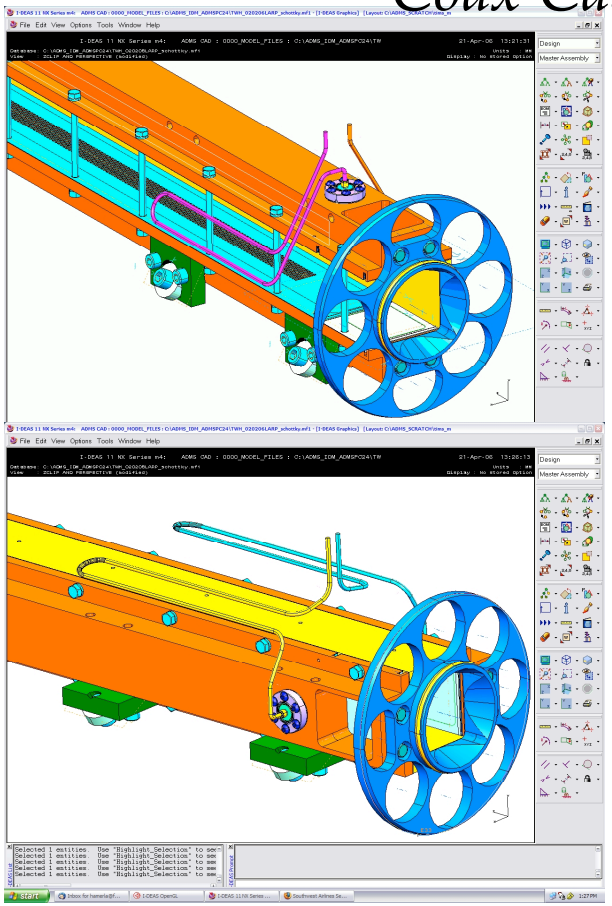

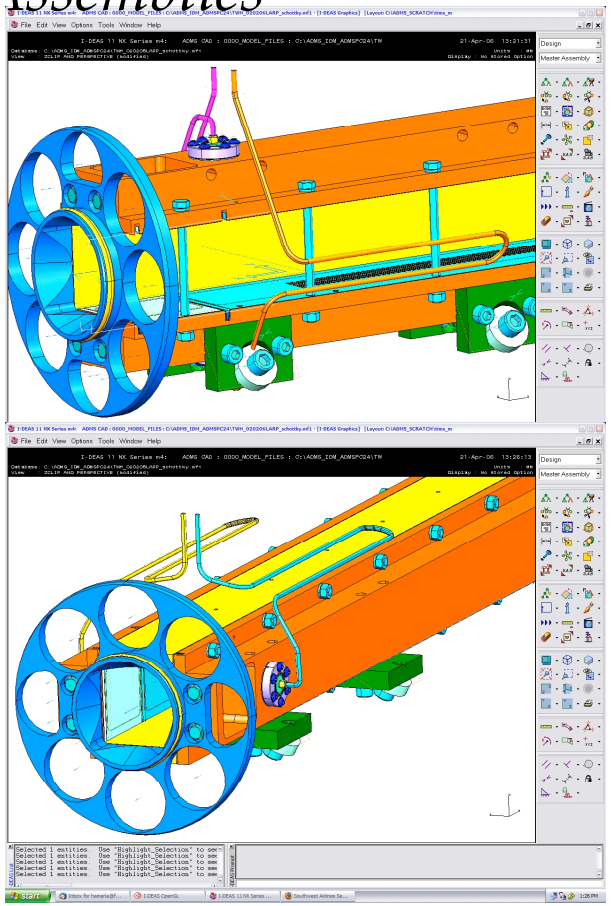

LARP LHC Schottky

- *Tunnel issues*
  - *Cable lists have been sent to CERN*
  - *CERN working on getting required RF, timing, and trigger signals to the Sector 4 location of the Schottky's*

- *Software issues*
  - *Due to limited software resources, CERN has adopted Lab View software for initial system commissioning. This is acceptable to getting Schottky functional.*
  - *Need to understand whether Lab View or other Java application is necessary for Schottky system post commissioning. Who will be responsible for this software?*

- ***Near Term Calendar***
  - *April 24-Deliver mechanical prints to CERN for approval*
  - *April 26-28-LARP Collaboration meeting Berkeley*
  - *June 19-23-System Design review at CERN*
  - *July 5- Begin Electronics prototyping*
  - *July 31-Pickups fabrication complete at CERN?*
  - *August-Pickups installed in LHC?*
  - *Planning for future CERN visits TBD*