LHC Crab Cavities, CM12

R. Calaga, April 10, 2009

Ack: LHC-CC Team

- Technical $\overset{?}{\leftrightarrow}$ Political Challenge
- Status & documentation
- Crab planning & LARP role

Perspective & Challenges

- Oct 2006: IR upgrade overload – Consolidation (crabs survive)
- Nov 2007: CARE-HHH, IR07 – Crabs were focus
- Feb 2008: LHC-CC08 – Established road-map for crabs
- Aug 2008: CERN workshop – Crab "Validation"
- Sep 2008: LARP, CM11 – Can we fund crabs ?
- Jan 2009: LARP-CERN meeting – Does CERN want it ?
- Sep 2009: LHC-CC09 – Will there be a prototype ?

FY08-09

Papers & Presentations

Papers

* LHC Crab Cavities: In the proceedings of the final CARE-HHH workshop, Chavannes-de-Bogis, Nov 200
* Crab Cavity Ramping Studies, presented at the LCU Meeting Oct 2009, A. Morita (Part I, Part II)
* LHC Crab Cavity Validation Report: Summary of the LHC-CC validation workshop, CERN, Aug 2008
* LHC-CC08 Summary Report: Summary of the 1st crab cavity workshop, BNL, Feb 2008
* Small Angle Crab Crossing for the LHC: Proceedings of the IR07 Workshop, Frascati, Nov 2007 (R. Cal
* Crab Cavity Option for LHC IR Upgrade: Proceedings of the LHC-LUMI-06 Workshop, Valencia, Oct 200
* Progress of beam-beam compensation schemes: Proceedings of the LHC-LUMI-05 Workshop, Arcidoss

Presentations

* 7th Webex Meeting: February 24, 2009 (Meeting Minutes)
  - Status, Tunnel Constraints & Future Deadlines - R. Calaga
  - Cavity/Coupler Progress:
    - L. Xiao (SLAC Progress), G. Burt (UK Progress)
    - L. Xiao (SLAC Alternative Design Results)
  - Multipacting Analysis for KEK-B Structure - N. Solyak

* 6th Webex Meeting: December 9, 2008 (Meeting Minutes)
  - Cavity Down Selection & Merit Sheets - R. Calaga
  - Cavity/Coupler Progress:
    - Y. Morita (Cavity, KEK-B Experiments), Z. Li (SLAC Progress), G. Burt (UK Progress)
  - Cryostat & LHC Tunnel - Y. Yakovlev
  - Discussions:
    Down Selection, Merit Sheet & improvements, Coupler based tuning. Multipacting & Thermal/Mecha

* 5th Webex Meeting: September 25, 2008 (Meeting Minutes)
  - Warm model fabrication and testing (J. Shi, Tsinghua University)
  - CERN Workshop Summary & FY09 Tasks/Budgets (R. Calaga, BNL)
  - Possible KEK-B Contribution to LHC-CC (Y. Morita, KEK)
  - Cavity/Coupler Progress: L. Xiao SLAC, G. Burt LU/DI/CL
  - Cryostat Progress (N. Solyak, FNAL)
  - KEK-B Compact Design (N. Kota, KEK)

- 7 Webex, 3 LARP-CM Sessions
- LHC-CC08 & CERN WS Summary
- CARE-HHH report (Dec 2008)
- PAC09
  - 1 Oral Contribution, >10 Posters
- LHC-CC09 summary report & Pre-TDR

tWiki Repository

LHC Crab Cavities

A small angle (~0.5mrad) crab scheme at the LHC is foreseen as one of the most effective tools for upgrade. Crab cavities recover the geometric luminosity loss from the finite crossing angle which ste nominal value. The crab compensation is anticipated to be accomplished in two phases:

- Phase I: A global scheme with cavities placed far from the IP (IR4 region) with the right phase
- Phase II: A local scheme near the IP and consequently the closed orbit outside the IR region i

RF Design & Requirements: Cavity, Couplers & Components
Optics with Crab Cavities: Global & Local
Collimation & Aperture
Tracking Studies Synchro-Betatron Resonances, DA, etc..
Integration into the LHC
Workshops, Meetings & Minutes
Papers & Presentations
Global Collaboration & Participants
FAQ

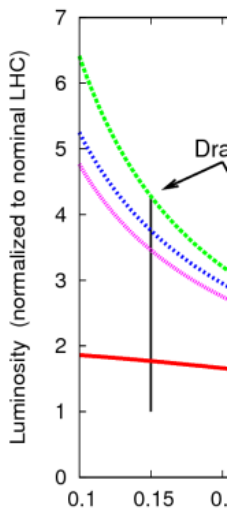

Next CC Meeting (LARP Meeting, CM12)

Date: Thursday, April 9, 2009
Time: 1:30-5:30 pm (Pacific Daylight Time: GMT -07:00, San Francisco)
For Meeting Details: Click Here

-- R. Calaga - 1 Apr 2008

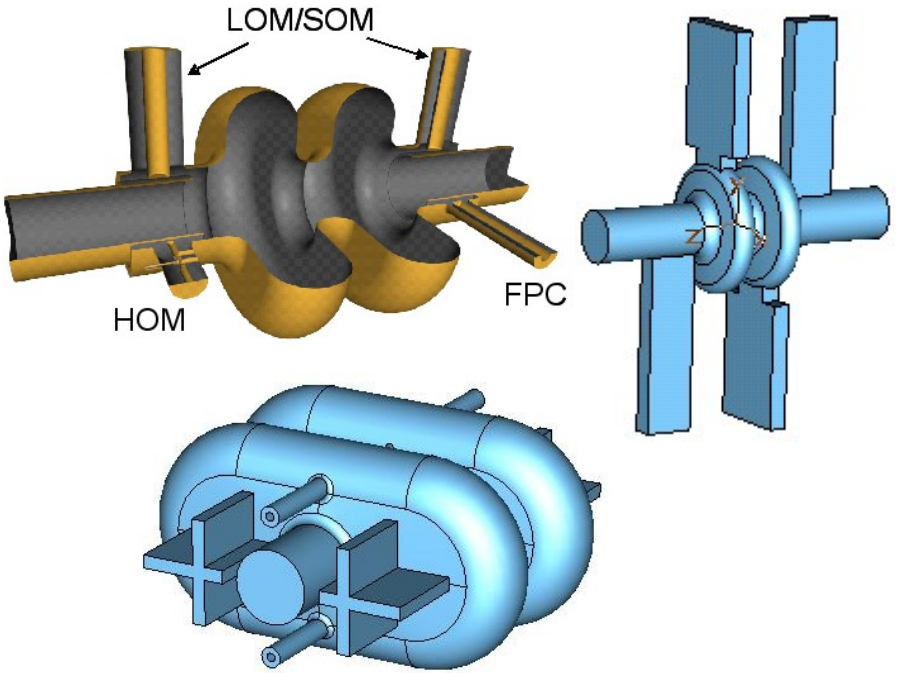

- Complete design(s)
- Simulations & operational scenarios
- Actively share information & analysis
- Documentation & schedule

Why do prototype test

- Present phase II upgrade options
  - D0, LPA, CC, ...
- One cavity/beam @IR4, proof of principle & most cost effective
- Understand the operational limitations
- Vital experience in technology, fabrication, integration (future machines)
- Luminosity leveling (enough to justify crabs)
- Other benefits from crab cavities
  - Momentum dependent "ac dipole" for collimation (S. Fartoukh)
- Wide spread synergy & interest

Installation Scenarios

- Easy: Installation in the capture cavity region
- Moderately Easy: Extend the IR4 Dog-Leg
- Moderately Difficult: Dog-Leg elsewhere in the ring (E. Jensen)
- Difficult: Outside the IR4 region

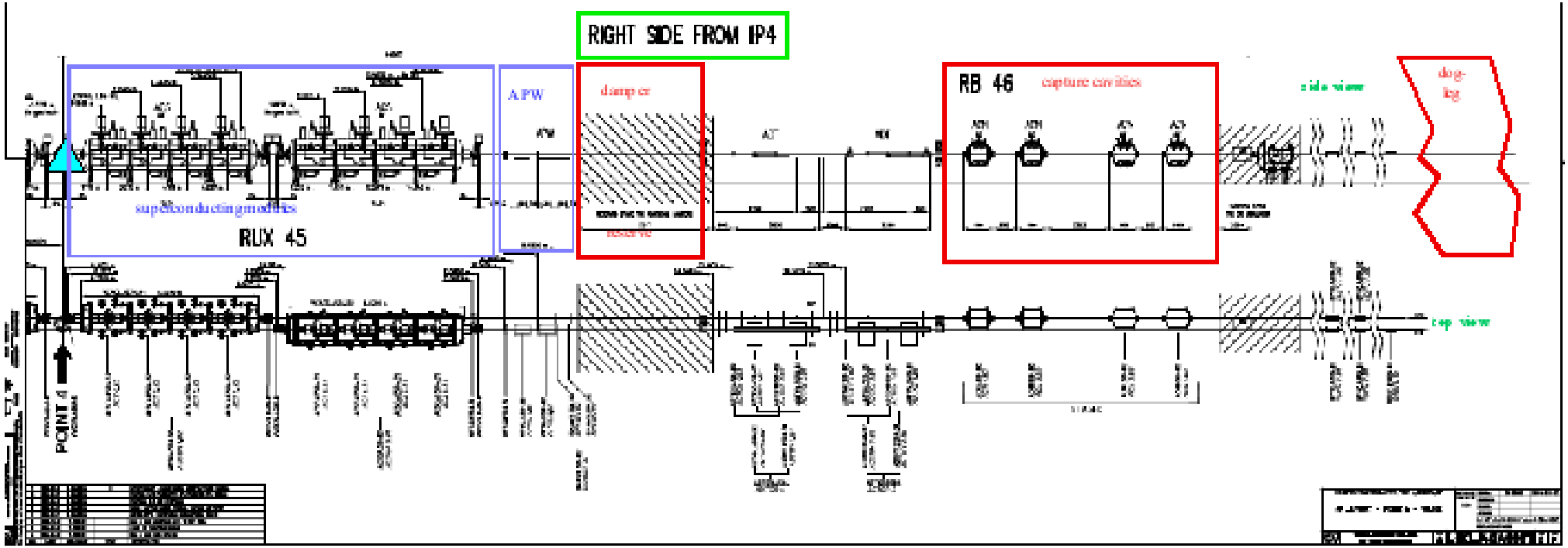

IR4 Dog-leg

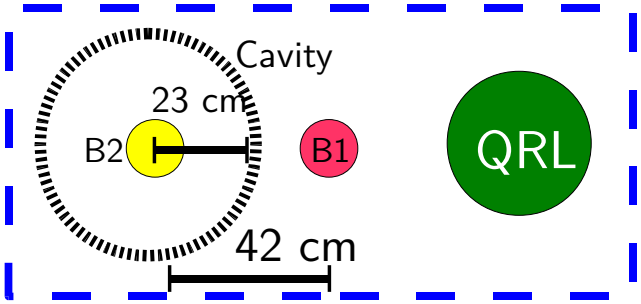

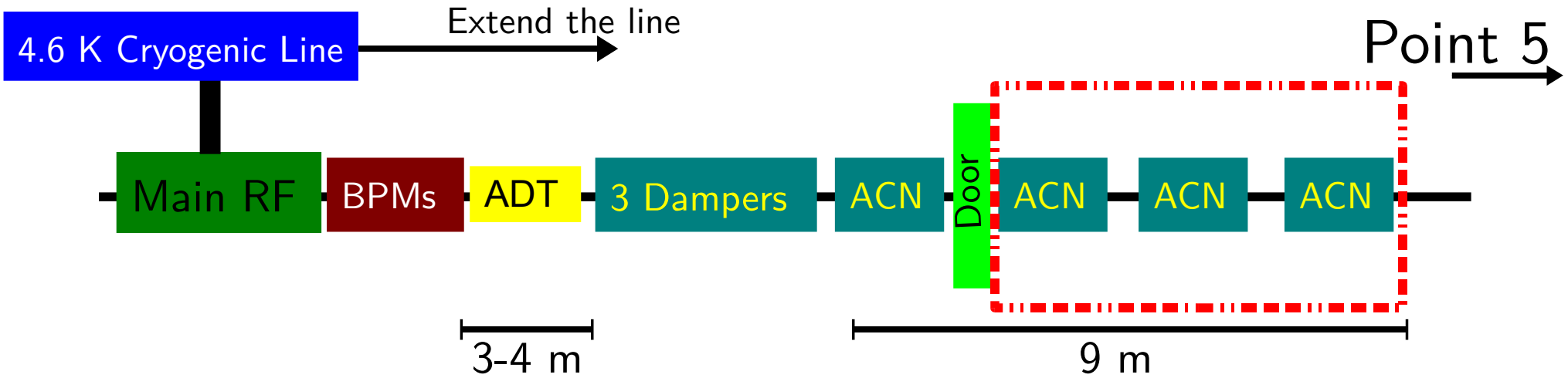

Max 3m longitudinally

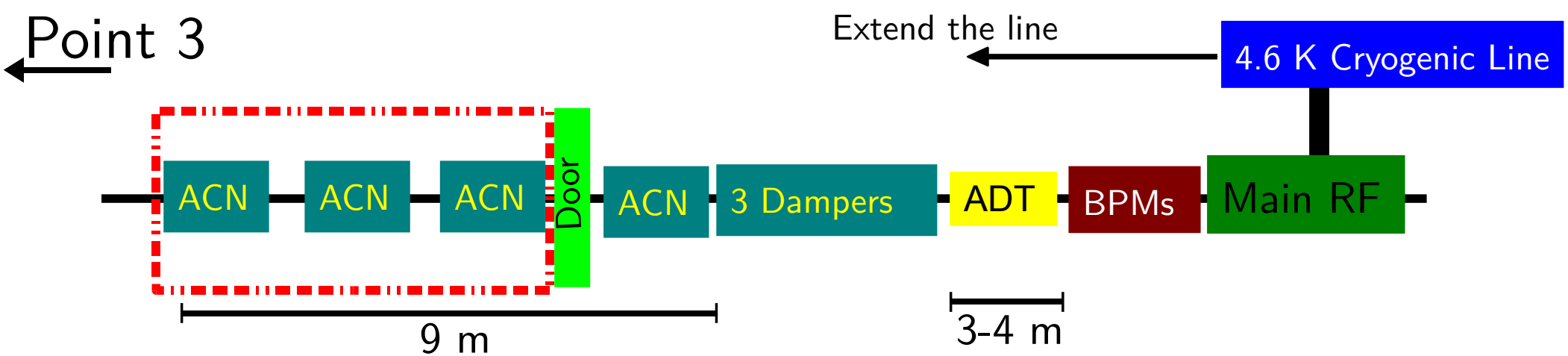

LHC-CC09, Sept 16-18

- 3rd Crab Cavity Workshop to take place @CERN
- Workshop format:
  - Advisory Board (10), Program Committee (18)
  - 2 day workshop – similar format as LHC-CC08
  - 0.5 day review by, session convenors report to AB
- AB recommedation for future R&D + summary report
- Preliminary technical report to outline cryomodule & test details

AB: I. Ben-Zvi, S. Chattopadhyay, G. Hoffstaetter, E. Jensen, S. Myers (Chair), M. Nessi, T. Raubenheimer, E. Tsesmelis, J. Virdee, A. Yamamoto

PC & Program: Invitations underway

5-6 yr Proposal

	LHC Crab Cavities 04/09/09		Progress	Milestones	Future							
WBS	**Task**	**POC**	**Status**	**Request**	**2007**	**2008**	**2009**	**2010**	**2011**	**2012**	**2013**	**2014**
					$0k	$25k	$300k+	~$700k	~$700k			
0	LHC-CC08	LARP-EUCARD	Completed									
1	Beam Simulations	BNL/KEK/CERN	In Progress									
2	RF Simulations	KEK/LBL/SLAC/UK	In Progress									
3	Cryomodule Development	FNAL	In Progress									
4	LHC-CC09	LARP-EUCARD	In Progress									
5	Warm Model Testing	UK/LARP	Not Started									
6	Coupler Testing	UK/LARP	Not Started									
7	LHC-CC10	LARP-EUCARD	Not Started	Project Engineer								
8	Fabrication	SBIRs	Not Started									
9	Processing	-	Not Started									
10	Testing	-	Not Started									
11	Cryostat Assembly	FNAL	Not Started									
12	LHC-CC11	LARP-EUCARD	Not Started									
13	CERN Test Stand	CERN	Not Started									
14	LHC-CC12	LARP-EUCARD	Not Started									
15	Integration	CERN-RF	In Progress									
16	Controls	CERN-RF	Not Started									
17	LHC-CC13	LARP-EUCARD	Not Started									
18	OP Procedures	CERN	Not Started									
19	Beam Tests	CERN	Not Started									

- LARP deliverable: Cryomodule TDR FY10-11
- Assist in fabrication & testing
  - "Crabbed-APL": Project Engineer ?

Schedule 0.1

Beam Simulations
04/09/09

Progress | Future

WBS	Task	Sub-Task	POC	Request	2007	2008	2009	2010	2011	2012	2013	2014
1	Optics		LARP-CERN									
1.1		Prototype Tests, Nominal										
1.2		Prototype Tests, Phase I										
1.3		Injection & Ramp										
		Crab Squeeze @IR4										
2	Beam -Beam		KEK/LARP/CERN									
2.1		Emittance Growth, Scaling Laws										
2.2		Modulated Noise, Scans										
2.3		RF Curvature Effects										
2.4		KEK-B Experiments, Benchmark		MS/GS/PD								
2.5		Lifetime, Lumi-Leveling		MS/GS/PD								
2.6		Misc										
3	Collimation		EUCARD-CERN									
3.1		Accurate Impact Parameters										
3.2		Global/Local Inefficiency										
3.3		Nominal/CC Comparison										
3.4		Phase I, Comparison										
3.5		Optimization of Collimators										
4	Impedance		LARP-CERN									
4.1		Impedance Budget										
4.2		Stability Criteria for Modes		MS/GS/PD								
4.3		Injection & Ramp		MS/GS/PD								
4.4		Damping Studies		MS/GS/PD								
4.5		Misc										
5	OP Scenarios		LARP-CERN									
5.1		Failure Modes										
5.2		Machine Protection & Interlocks										
5.3		Cavity Ramping & Detuning										
5.4		Injection Studies		MS/GS/PD								
5.5		Acceleration		MS/GS/PD								
5.6		Cavity Trips & Transients		MS/GS/PD								
5.7		Feedback & Transperancy										
5.8		Minimum Test Scenario(s)										
5.9		Special Filling Schemes										
6		Misc										

Schedule 0.2

Cryomodule 04/09/09			Progress	Future								
WBS	**Task**	**Sub-Task**	**POC**	**Request**	**2007**	**2008**	**2009**	**2010**	**2011**	**2012**	**2013**	**2014**
1	Cavity		LARP/UK									
1.1		Elliptical Cavity Optimization										
1.2		Multipacting with TM110										
1.3		Novel Concepts		MS/GS/PD								
2	Couplers		KEK/LARP/UK									
2.1		RF Modeling, Damping		MS/GS/PD								
2.2		Multipacting Analysis										
2.3		Mechanical/Thermal Analysis										
2.4		Copper Models & Testing		MS/GS/PD								
2.5		Low/High Power Testing										
3	Cryostat		LARP									
3.1		Evaluation of Cavity Design										
3.2		LHC Tunnel Constraints										
3.3		Enginnering Design, Nominal		ES								
3.4		Procurement, Fabrication										
3.5		Assembly										
4	Cryogenics		CERN									
4.1		4K (2K) Circuits										
4.2		Interface with LHC Cryo		PD								
4.3		Safety Valves, Interlocks		PD								
4.4		CERN Test Stand		PD								
5	RF Controls		CERN-LARP									
5.1		Low level RF		MS/GS/PD								
5.2		Phase Control and Testing		MS/GS/PD								
5.3		Integration with LHC controls		MS/GS/PD								
6	Infrastructure		CERN-EUCARD									
6.1												
6.2		Power Amplifiers		MS/GS/PD								
6.3		Transmission Lines		MS/GS/PD								
6.4		Control System		MS/GS/PD								
6.5		Cryomodule testing										
6.6		Tunnel Preparation										
6.7		Installation/Alignment										
6.8		RF Powering										

FY10 Focus

- RF design of the cavity-couplers near completion
- Provide engineering file-formats for the cavity designs
  - Peak Fields, R/Q, Qext, impedances... feed into simulations
  - Multipacting analysis (alreadt excellent progress)
  - Mechanical/thermal analysis (to follow)
- Cryostat design needs significant ramp-up
- RF controls needs a crab specific design/testing
- Cost estimate of infrastructure, cryogenics, safety systems etc...

KEK-B Experiments for LHC

Artificial modulated noise (inside and outside betatron spectrum)

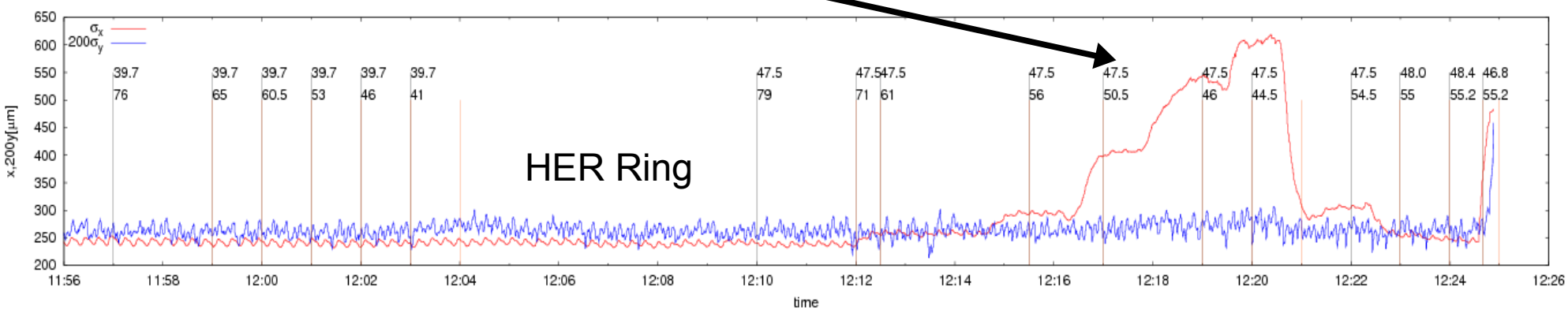

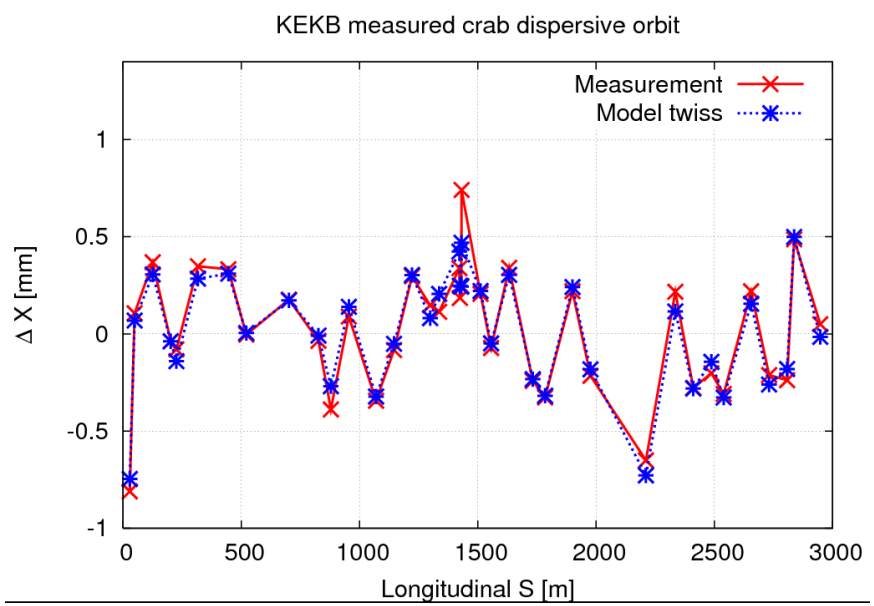

1st measurement of crab-dispersion

PRST-AB to be submitted

Prelim OP Scenarios & Tests

- Cavity-coupler conditioning
- Injection/Ramp (detuned/dephased & "zero" voltage)
  - First turn, capture efficiency, emittance growth
- Top energy
  - Cavity re-phasing/re-tuning
  - Cavity ramping (9-90 ms)
  - Crab-β squeeze
- Beam Studies (single → multiple, 50ns → 25ns)
  - Emittance growth, closed orbit, RF phasing, feedback, filling scheme
  - Sp. luminosity gain & leveling, collimation optimization

Lumi Gain

Crab Voltage 2.5-5.5 MV

$\{E, {}^{max}\beta_{crab}\}$	3 TeV, 1 km	5 TeV, 2 km	7 TeV, 3 km
β* = 25 cm	Reduce Emittance (x3.7-4.8)		56%
β* = 30 cm	Similar		40%
β* = 55 cm	N/A		10%

Failure Scenarios

Before prototype tests:

- Fabrication, cryostat
- Cavity-coupler performance, compliance

Beyond prototype tests:

- Cavity phasing-tuning limits and non-adiabatic ramping
- Cavity trips & power supply problems
- Vacuum degradation
- Cavity and component quench
- RF loops & feedback $\rightarrow$ instabilities
- Alt: two cavity system vs. damp/dephase/detune
- Misc

Conclusions

- Continue R&D towards LHC-CC09/10 (~700k/yr, $<$ 1FTE/lab)
  - "TDR": cryomodule, integration, OP procedures, simulations
  - Collimation simulations show similar results as nominal LHC (Impact Par discussions)
- KEK-B experiments to vital for LHC specific issues
  - Same luminosity as before with 30% less current (β-beat fixed)
  - Crab-dispersion, noise, OP scenarios
- Beyond FY10: Assist in prototype, parallel R&D on compact structures
- Boost "LARP" students (and postdocs) on specific tasks
- Positive outcome of LHC-CC09/10 $\rightarrow$ Move towards "Crabbed-APL" ?

Cryostat Development

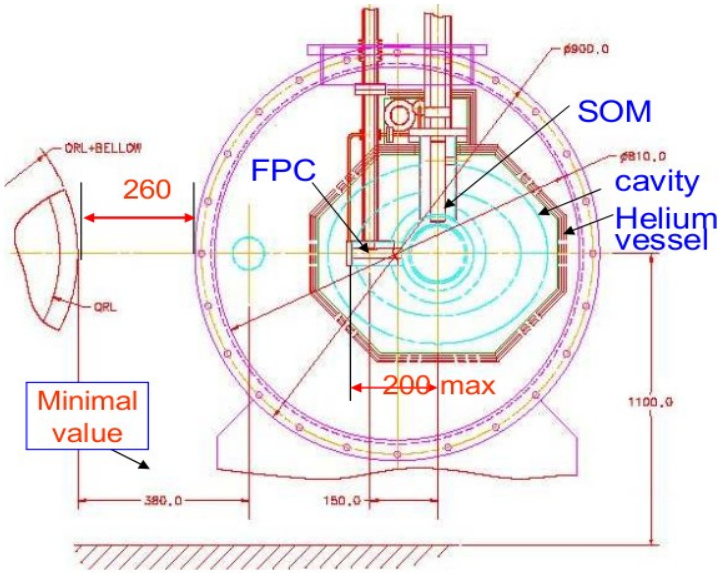

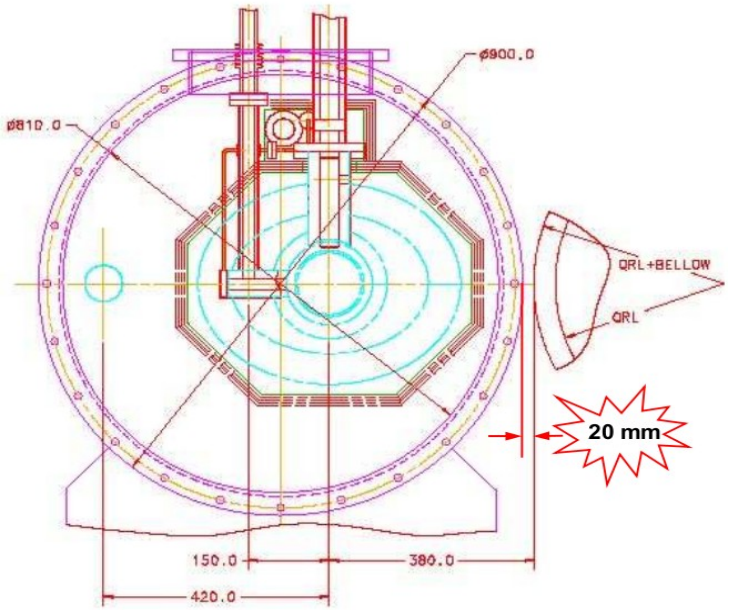

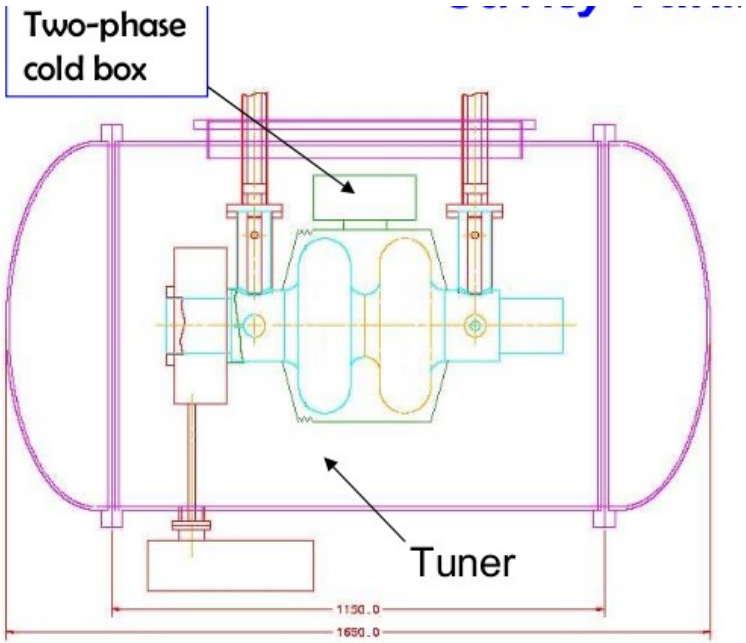

Cryostat design advancing well, need very detailed design of cavity, each coupler with dimensions, helium vessel, etc...

Multipacting

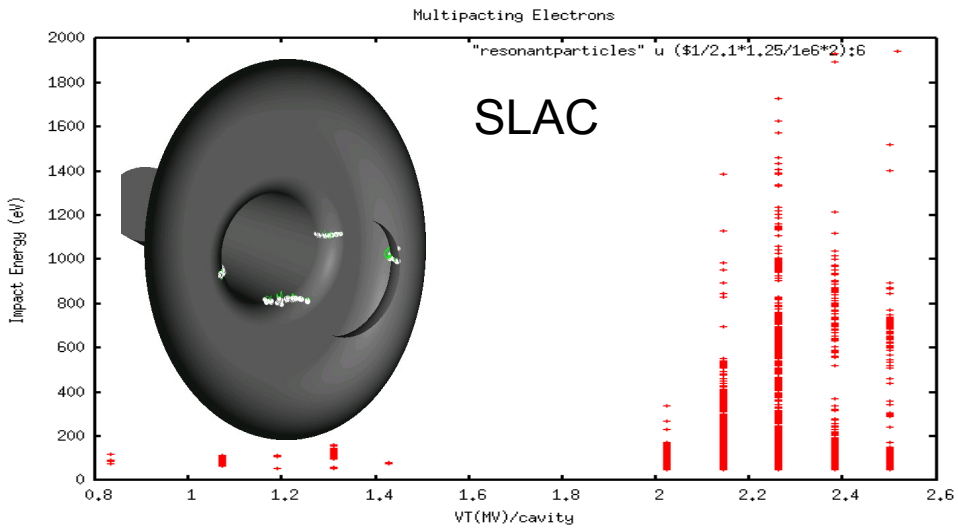

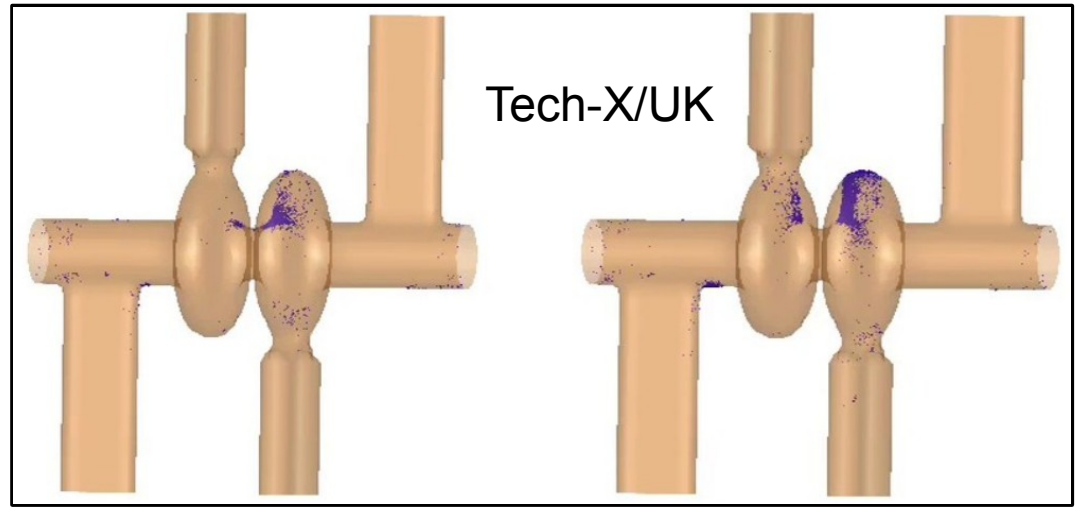

FNAL/KEK

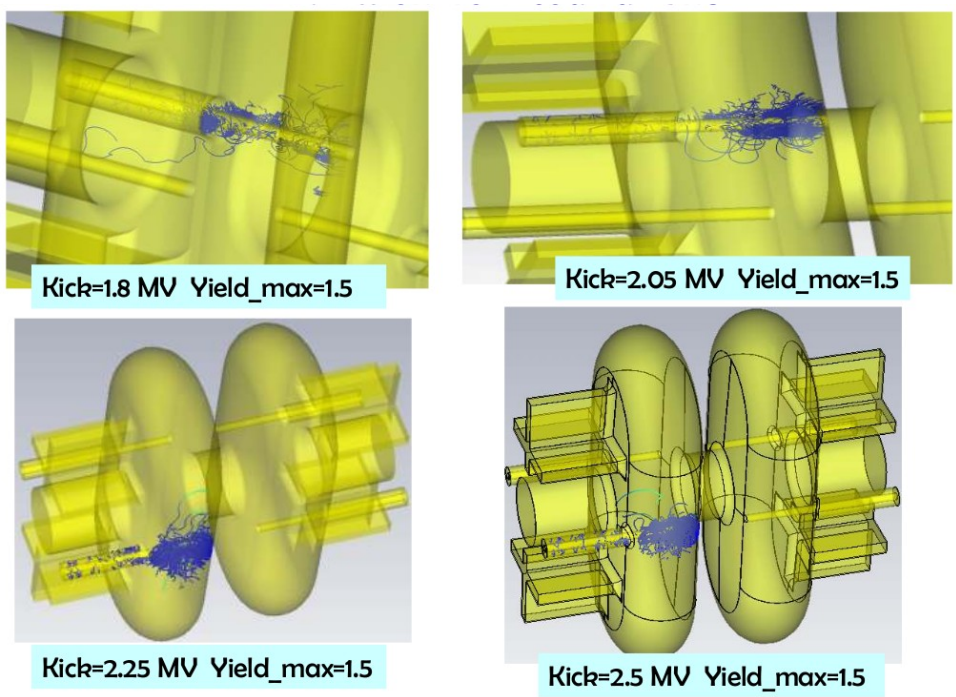

Excellent progress on multipacting and cures to overcome. Continue the effort towards LHC-CC09.

Warm Models, FY10-11

- 2-cell cavity model (more than one design ?)
- Coupler Model(s)
- Mock-up Cryostat ?
- Engineering design and fabrication
    - Sort all possible difficulties (by LHC-CC11)
    - Benchmark RF simulations
    - SBIRs if approved are well timed for this effort, LARP support
- Test program for warm model measurements