# EM and Multipacting modeling for Crab Cavity development

C. Nieter, P. Stoltz, S. Sides, C. Roark, T. Austin, J.R. Cary
Tech-X Corporation

G. Burt, J. Smith
Cockcroft Institute

H. Wang, K. Tian, R. Rimmer
Jefferson Lab

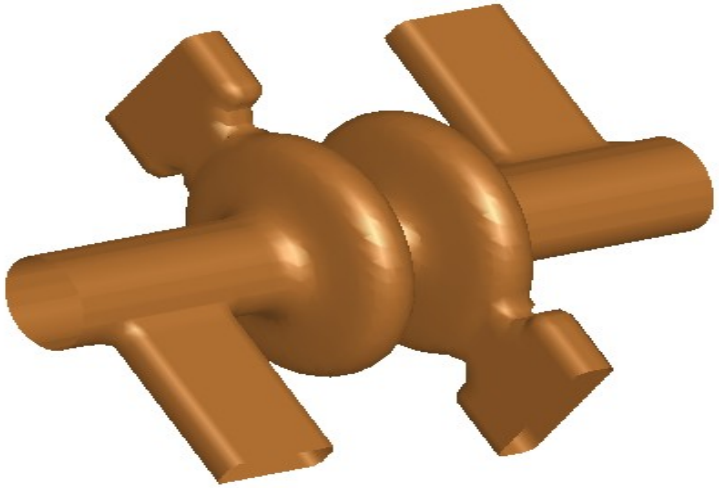

Work supported by DOE SBIR grant DE-FG02-05ER84172
And DOE SciDAC grant DE-FC02-07ER41499

# VORPAL is a powerful simulation tool for studying cavity multipacting

- FDTD electromagnetics coupled with Particle-in-Cell (PIC)
- Second order accurate boundary models
- Secondary electron physics (Furman/Pivi)
- Ability to track individual trajectories

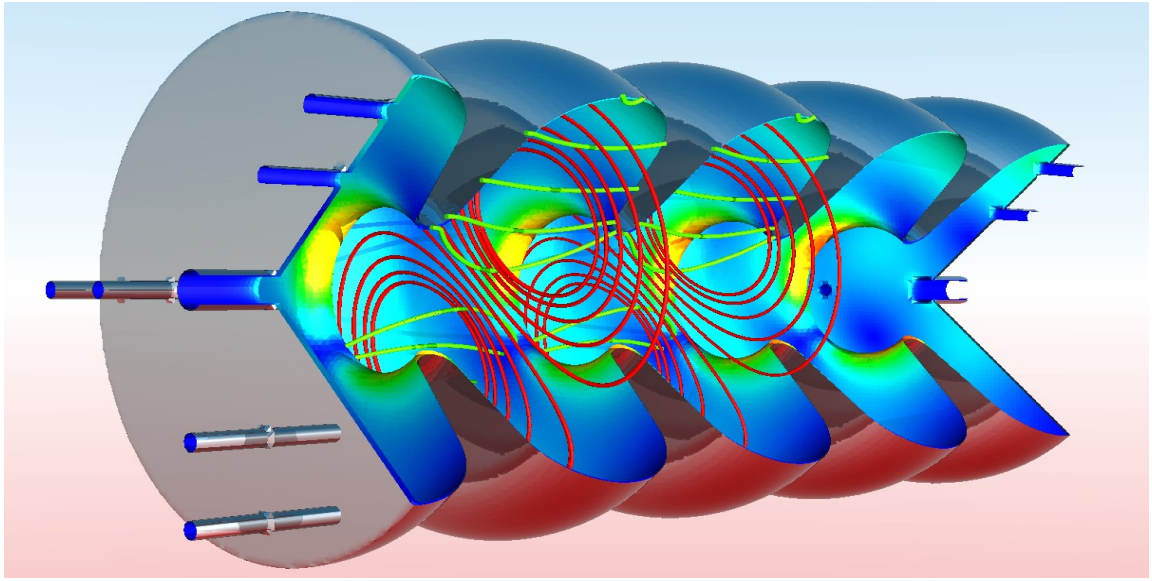

# Filter diagonalization allows extraction of cavity frequencies and modes

- G.R. Werner, J.R. Cary, "Extracting degenerate modes and frequencies from time-domain simulations with filter-diagonalization", *Journal of Computational Physics*, Vol. 227, pp. 5200-5214, 2008
- Both frequencies and modes are found
- Deals with degeneracies

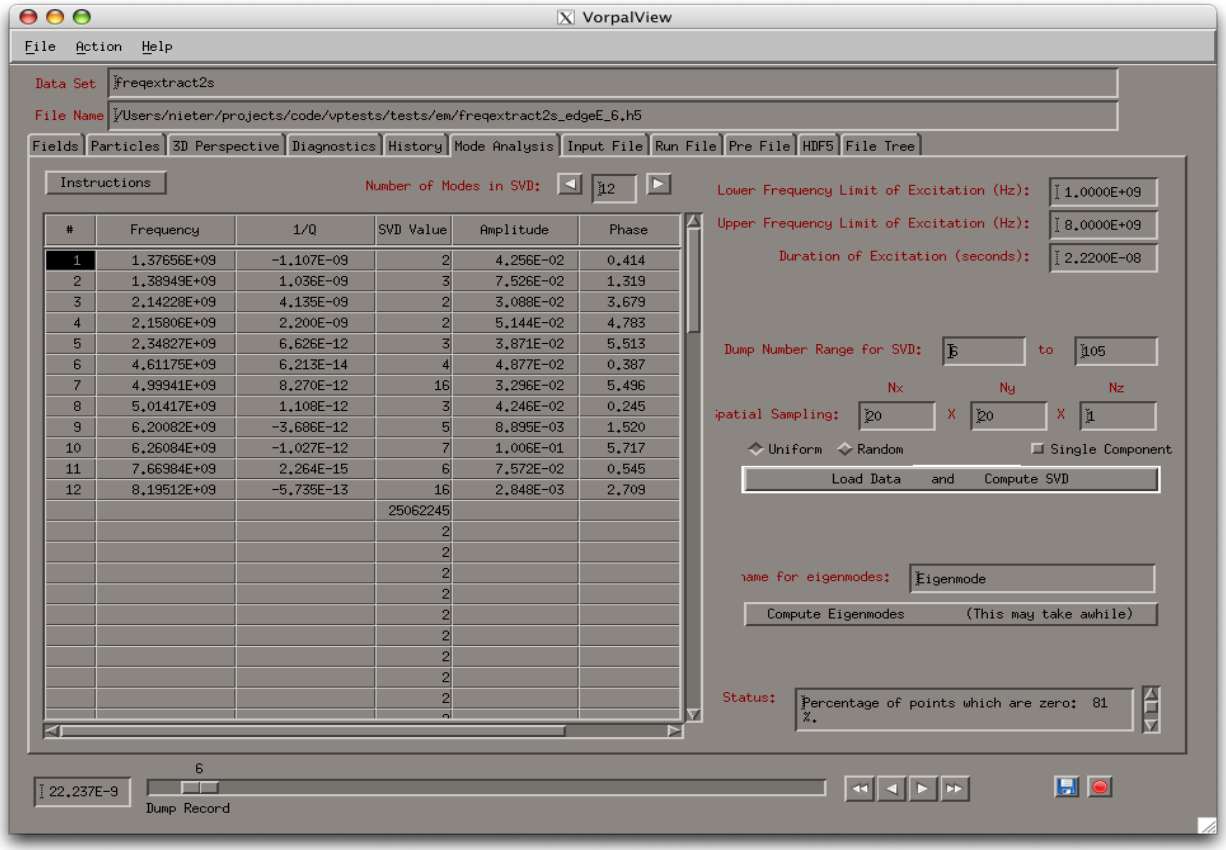


| # | Frequency | 1/Q | SVD Value | Amplitude | Phase |
|---|---|---|---|---|---|
| 1 | 1.37656E+09 | -1.107E-09 | 2 | 4.256E-02 | 0.414 |
| 2 | 1.38949E+09 | 1.036E-09 | 3 | 7.526E-02 | 1.319 |
| 3 | 2.14228E+09 | 4.135E-09 | 2 | 3.088E-02 | 3.679 |
| 4 | 2.15806E+09 | 2.200E-09 | 2 | 5.144E-02 | 4.783 |
| 5 | 2.34827E+09 | 6.626E-12 | 3 | 3.871E-02 | 5.513 |
| 6 | 4.61175E+09 | 6.213E-14 | 4 | 4.877E-02 | 0.387 |
| 7 | 4.99941E+09 | 8.270E-12 | 16 | 3.296E-02 | 5.496 |
| 8 | 5.01417E+09 | 1.108E-12 | 3 | 4.246E-02 | 0.245 |
| 9 | 6.20082E+09 | -3.686E-12 | 5 | 8.895E-03 | 1.520 |
| 10 | 6.26084E+09 | -1.027E-12 | 7 | 1.006E-01 | 5.717 |
| 11 | 7.66984E+09 | 2.264E-15 | 6 | 7.572E-02 | 0.545 |
| 12 | 8.19512E+09 | -5.735E-13 | 16 | 2.848E-03 | 2.709 |
| | | | 25062245 | | |
| | | | 2 | | |
| | | | 2 | | |
| | | | 2 | | |
| | | | 2 | | |
| | | | 2 | | |
| | | | 2 | | |
| | | | 2 | | |
| | | | 2 | | |
| | | | 2 | | |

# Filter diagonalization applied to UK crab cavity design finds all modes

- Gets separation between polarization states
- Gets separation between pi and zero modes

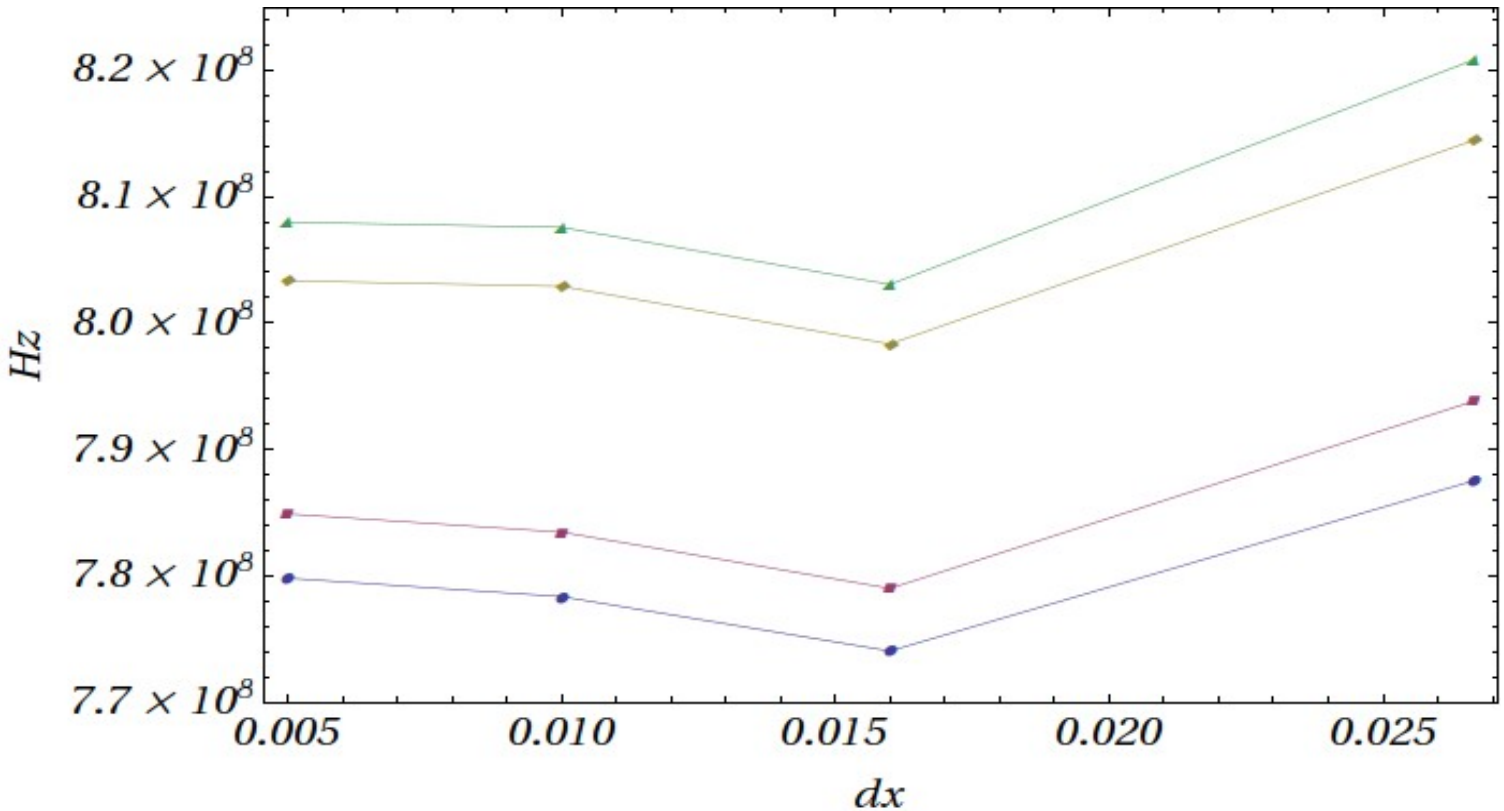

# Filter diagonalization applied to Crab cavity design finds all modes

- Pi mode that couples to the waveguides

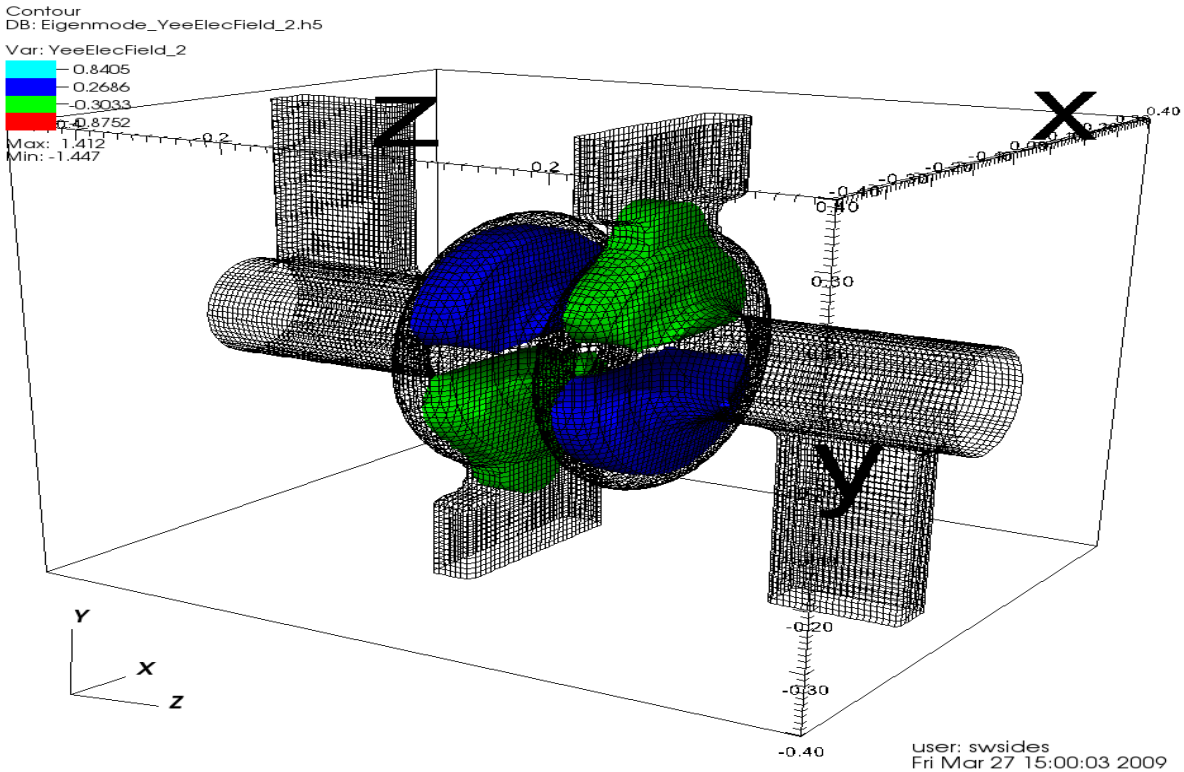

# Filter diagonalization applied to Crab cavity design finds all modes

- Zero mode that couples to the waveguides

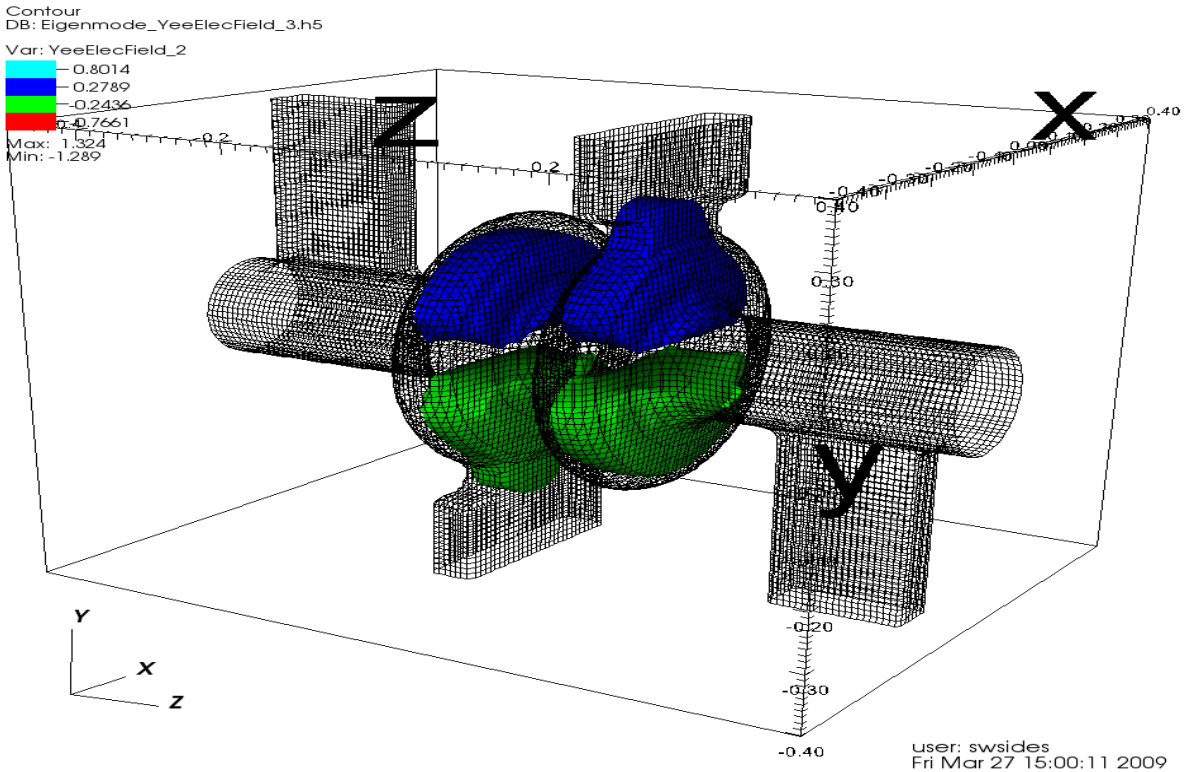

# Filter diagonalization applied to Crab cavity design finds all modes

- Pi mode that does not couple to the waveguides

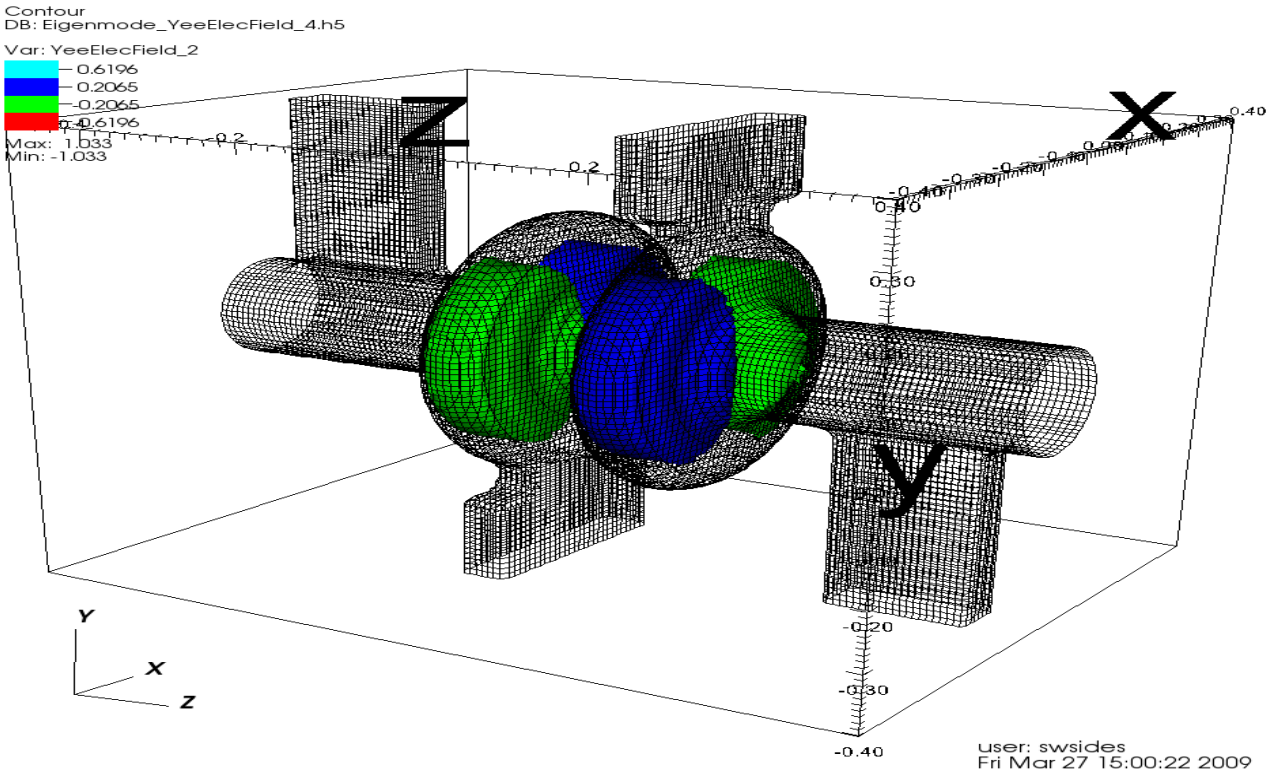

# Filter diagonalization applied to Crab cavity design finds all modes

- Zero mode that does not couple to the waveguides

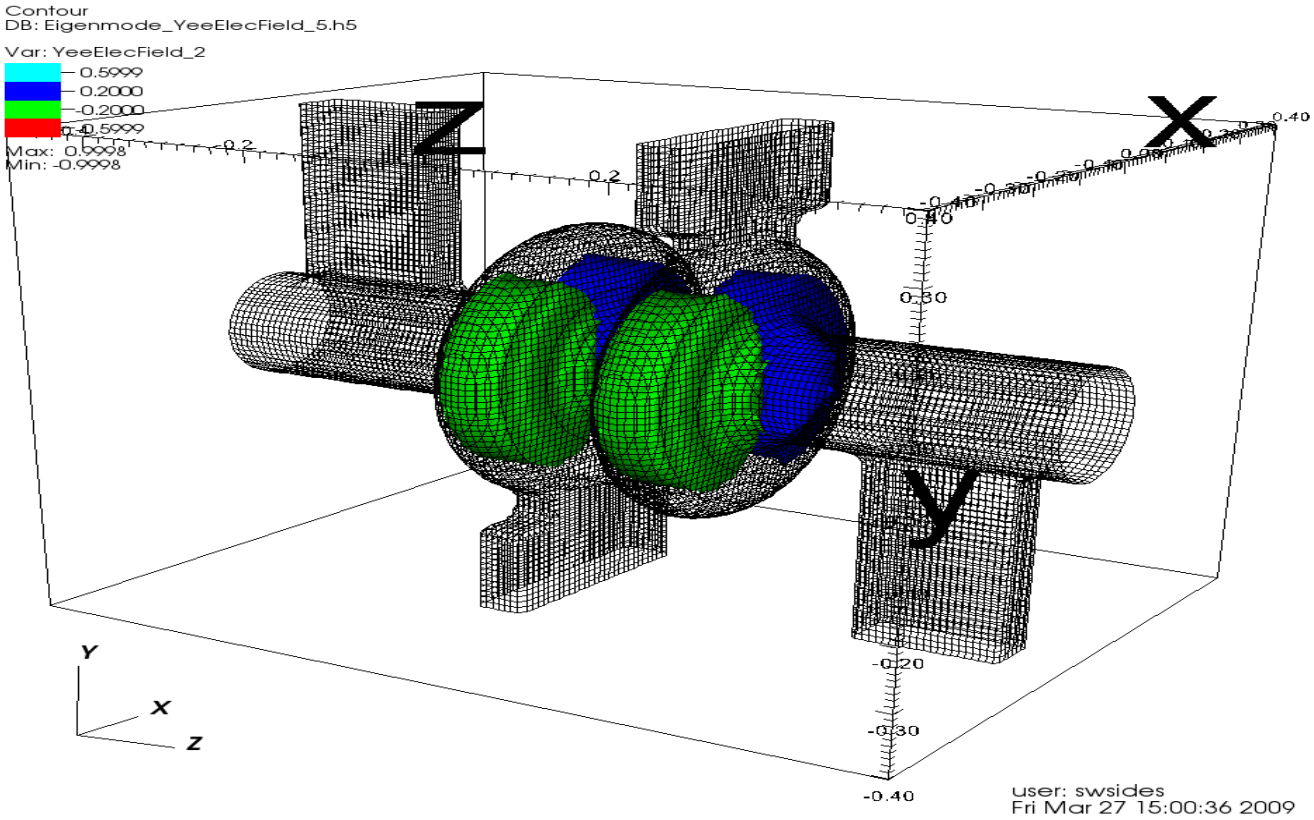

# Filter diagonalization compares favorably with results from Microwave Studio

| | VORPAL | Microwave Studio |
|---|---|---|
| Undamped Zero mode | 0.8076 GHz | 0.800 GHz |
| Undamped Pi mode | 0.8029 GHz | 0.800 GHz |
| Damped Zero mode | 0.7834 GHz | 0.783 GHz |
| Damped Pi mode | 0.7783 GHz | 0.778 GHz |

# VORPAL's secondary electron emission models allow multipacting studies

- Simple secondary emission – one secondary emitted at normal incidence
- Phenomenological model – true, diffuse and elastic secondaries
- M. A. Furman and M. Pivi, Phys. Rev. ST Accel. Beams 5, 124404 (2002)

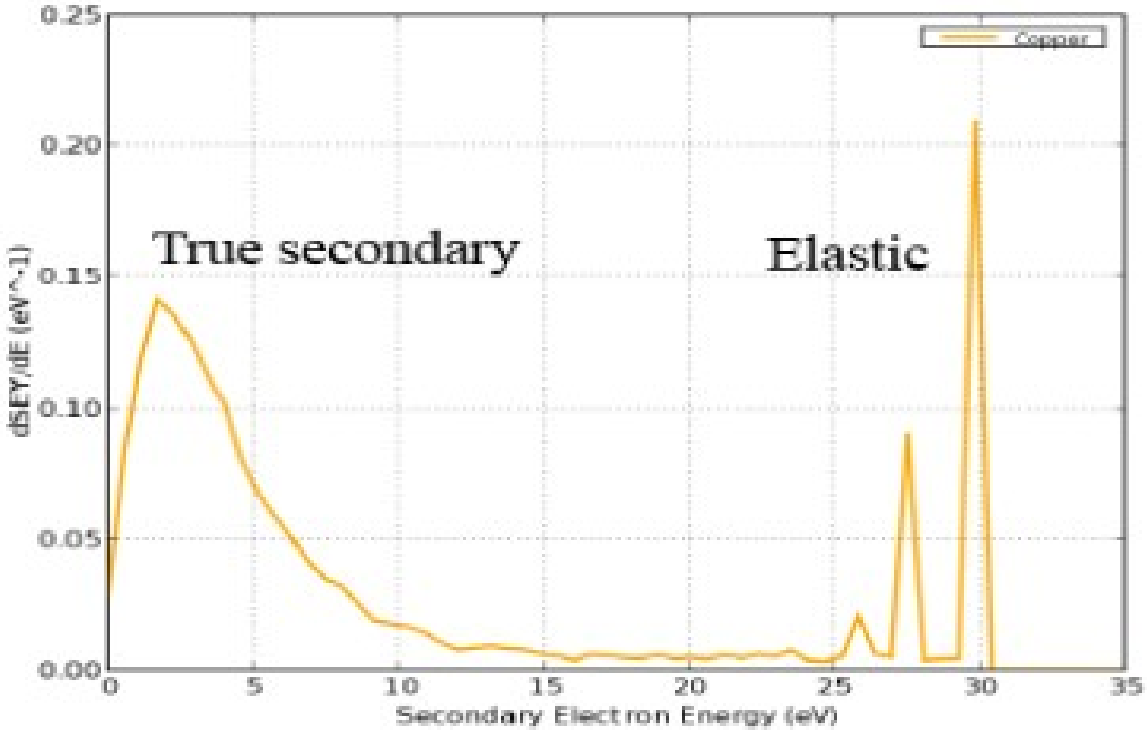

# VORPAL has been benchmarked against analytical multipacting results

- Both simple and phenomenological model reproduce multipacting bands

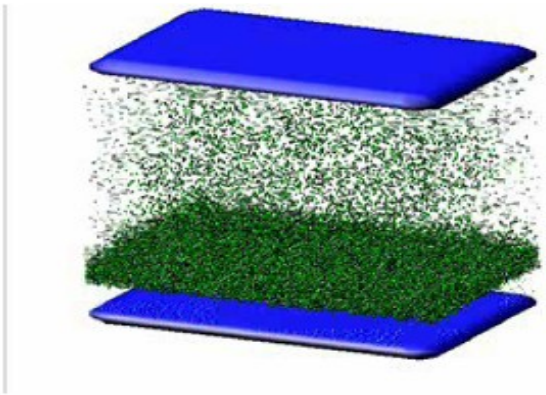

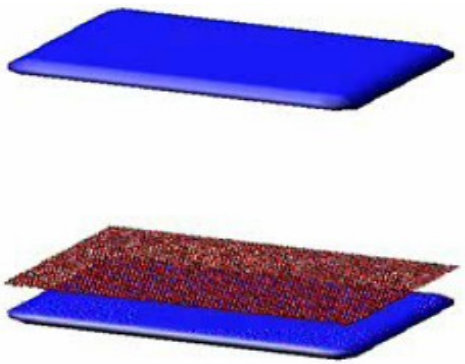

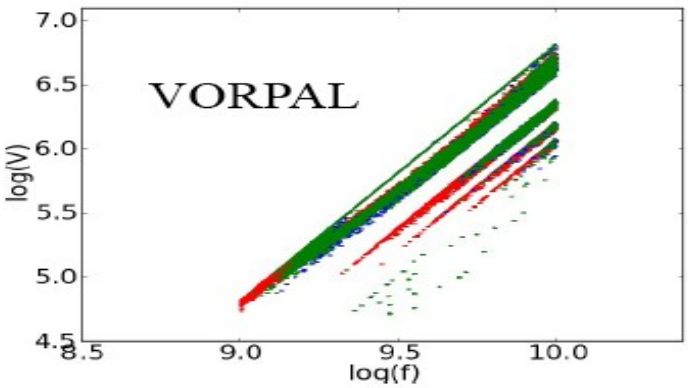


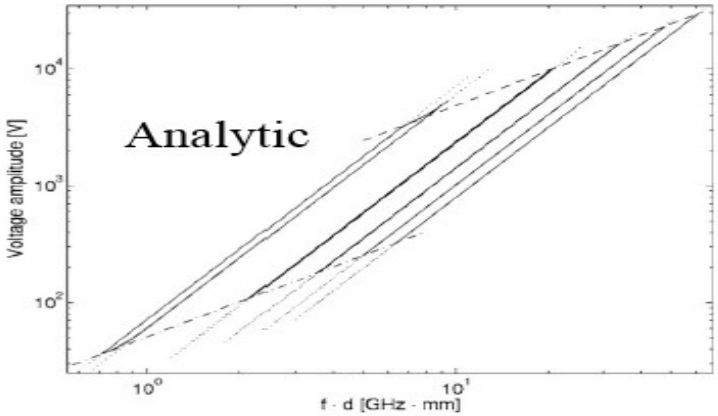

# VORPAL simulations can be used to identify potential multipacting

- Multipacting occurring in BNL quarter wave cavity

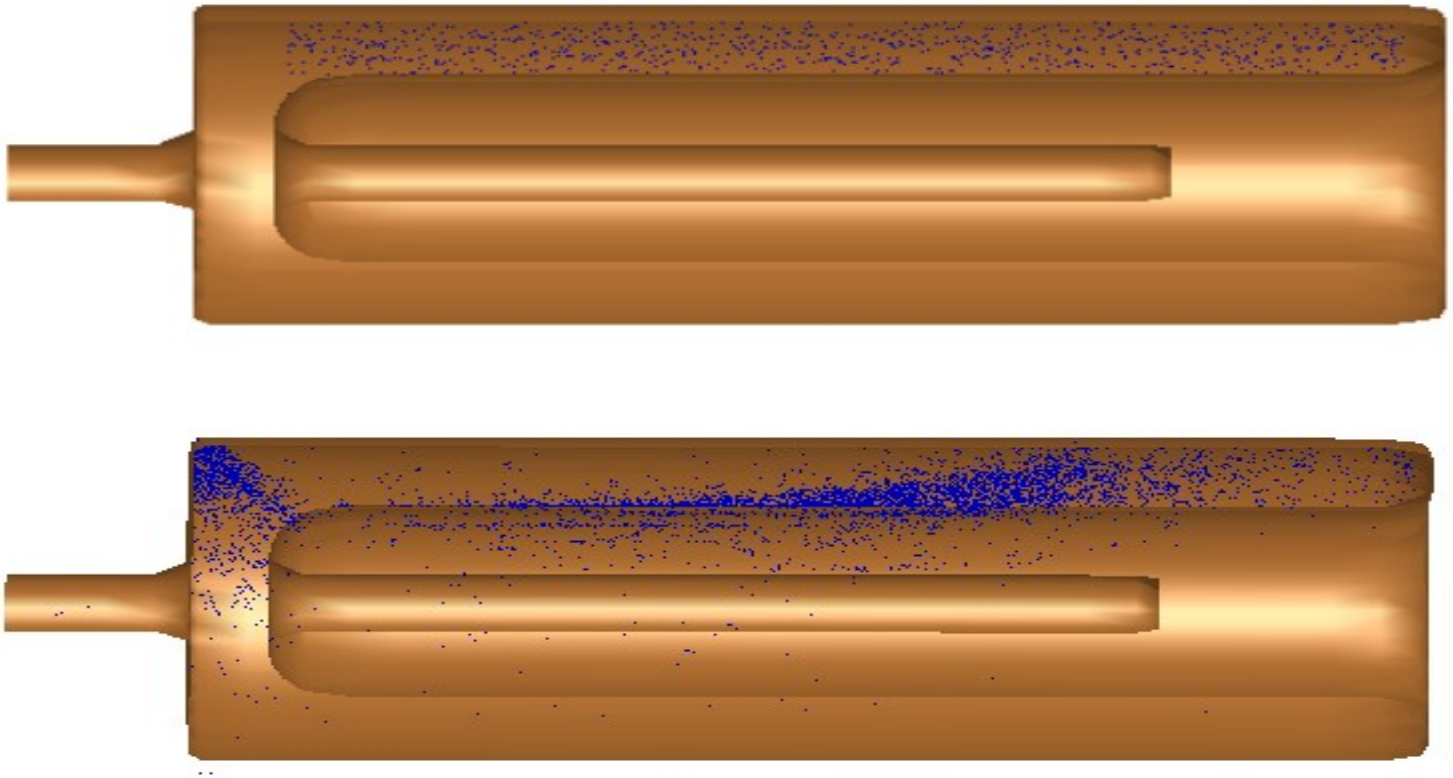

# Preliminary simulations show possible multipacting in UK crab design

- $E_{peak}$ ~10 MV/m

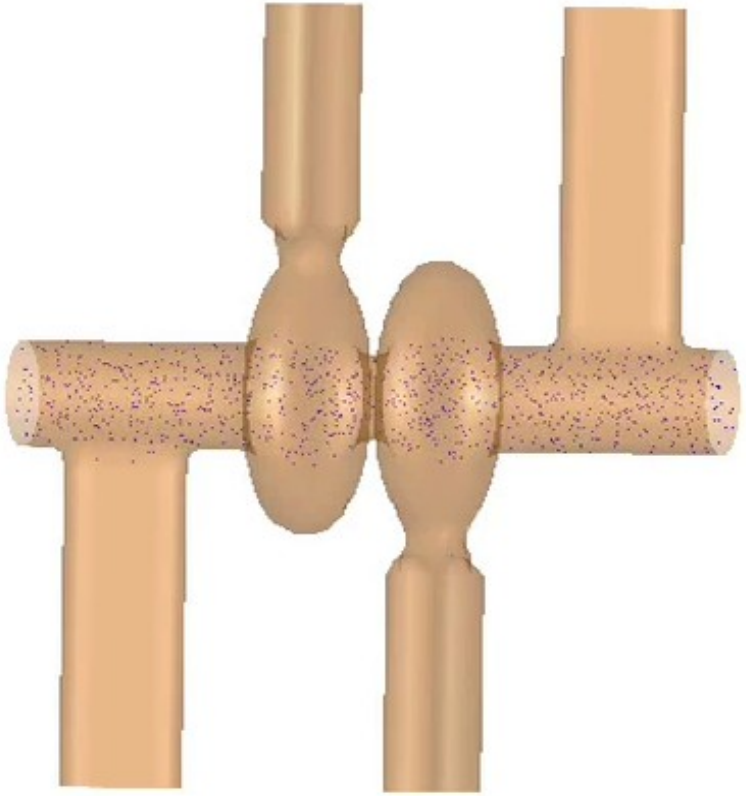

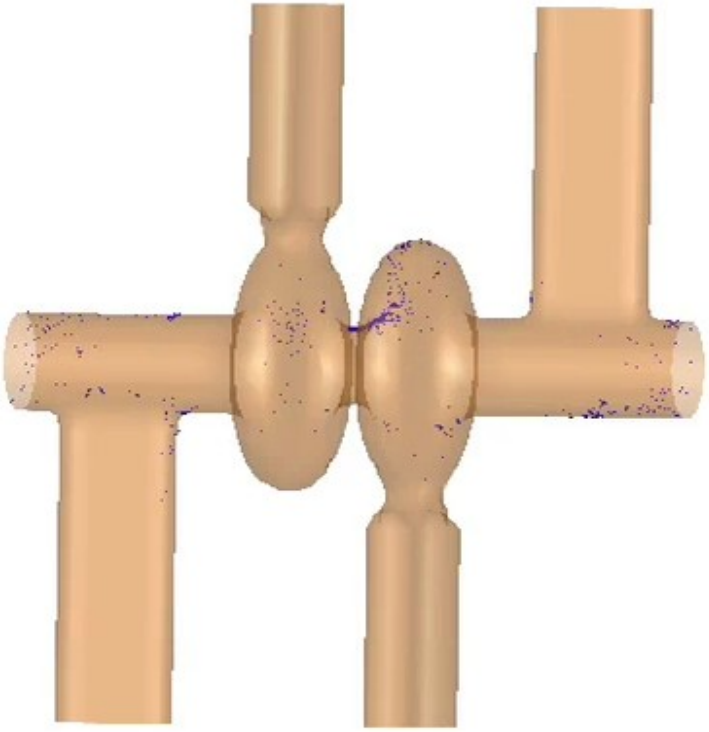

# Preliminary simulations show possible multipacting in UK crab design

- $E_{peak}$ ~10 MV/m
- Movement towards equator implies soft barrier multipacting

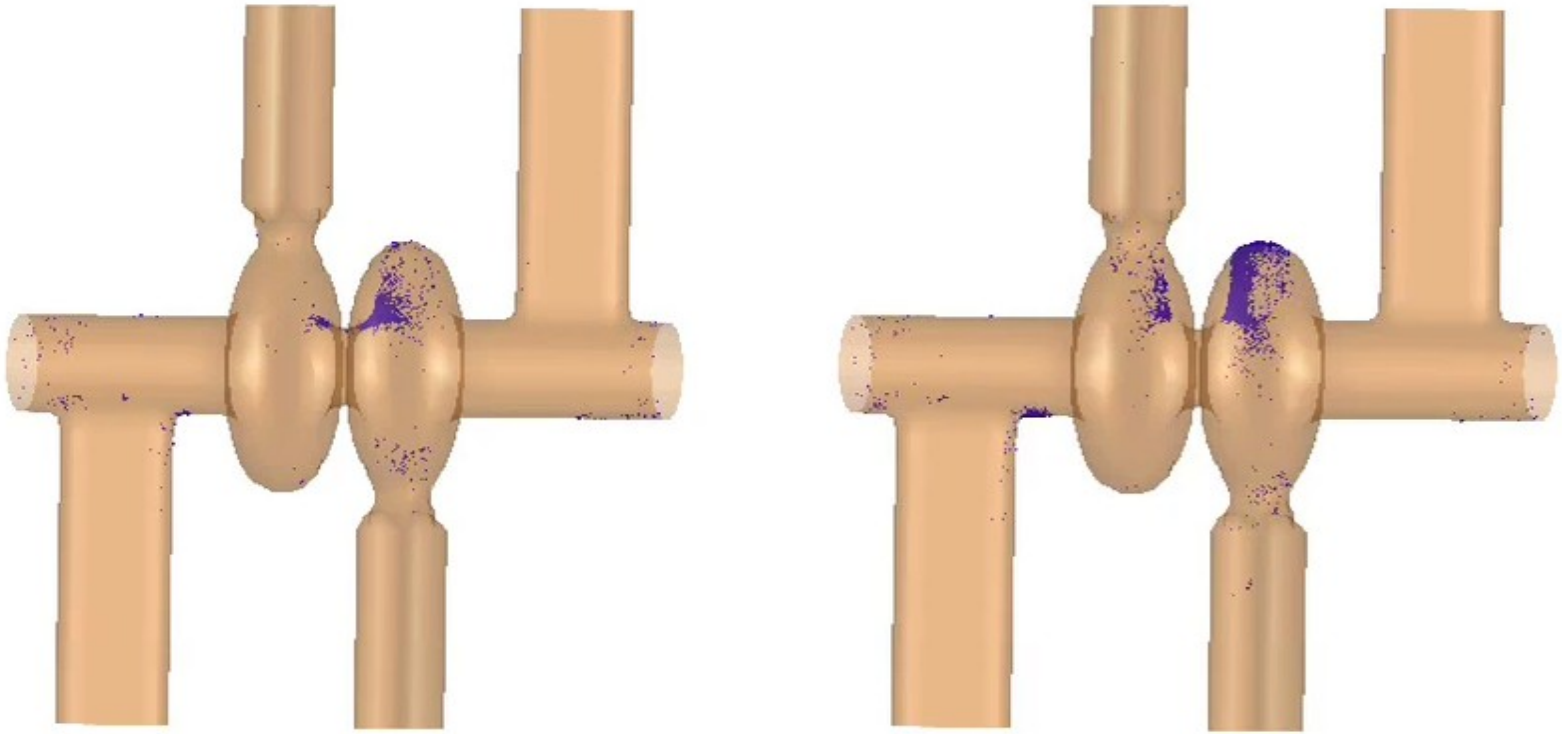

# Preliminary simulations show possible multipacting in UK crab design

- $E_{peak}$ ~10 MV/m

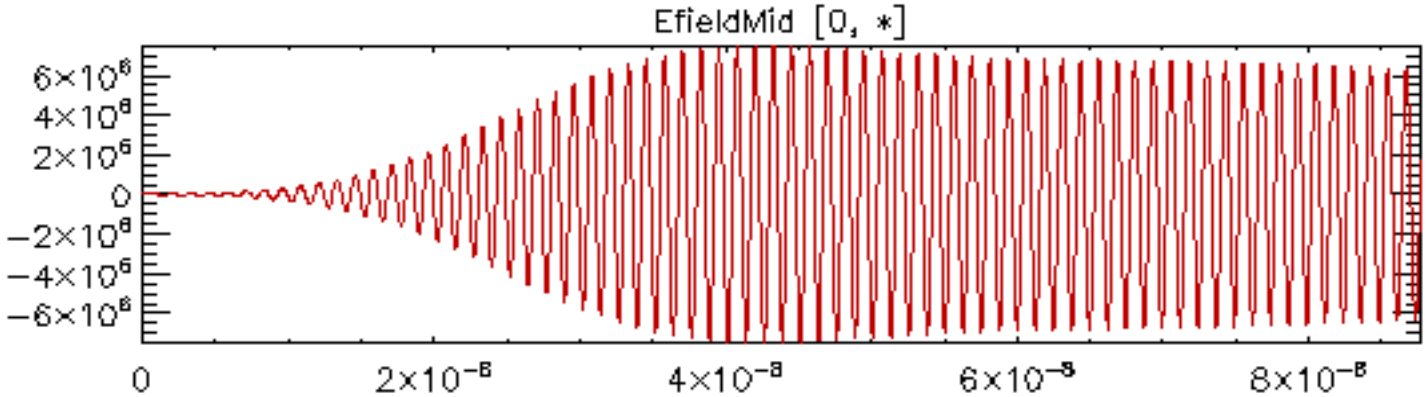


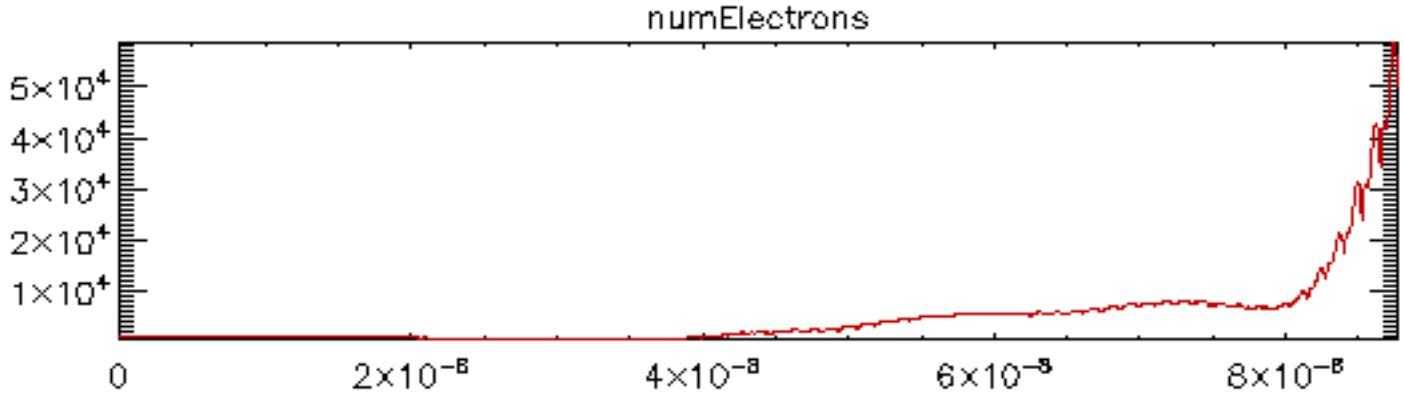

# Further simulations needed to clarify the nature of the multipacting

- With full secondary model simulations become very slow
- Once sites of multipacting are identified we can look at individual trajectories
- Identifying whether multipacting produces soft or hard barriers can be done with scans over power

# Simulation studies of UK crab cavity design will continue

- J. Smith will be running simulations with VORPAL
- Runs will include benchmarking with other tracking codes
- Simulation results will help guide cavity design